Stormwater Management Program (SWMP)

The City of Portsmouth

680 Peverly Hill Road, Portsmouth, New Hampshire 03801

EPA NPDES Permit Number *NHR041027*

June 2019

Permit Year 8 Update

Sept 2026

Intentional Blank Page

Table of Contents

1 Introduction 1

Permit Background 1

SWMP Background 1

Requirements for Water Quality Limited and Impaired Waters 2

Stormwater Team 3

Stormwater Outfalls and Receiving Water Bodies 4

Endangered Species and Historic Property Eligibility 6

Endangered Species Documentation 6

Historic Property Documentation 6

2 MCM 1: Public Education and Outreach 7

Educational Program Requirements 7

Best Management Practices for Public Education 8

3 MCM 2: Public Involvement and Participation 12

Compliance with Regulatory Requirements 12

Best Management Practices for Public Involvement 12

Public Review 13

Public Participation 13

4 MCM 3: Illicit Discharge Detection and Elimination (IDDE) Program 14

Compliance with Regulatory Requirements 14

BMP 3-1: Legal Authority 15

BMP 3-2: Written Illicit Discharge Detection and Elimination Plan 15

BMP 3-3: Sanitary Sewer Overflow (SSO) Inventory 15

BMP 3-4: Storm Outfall Mapping 15

BMP 3-5: Dry Weather Screening / Sampling 16

BMP 3-6: Catchment Investigations 16

BMP 3-7: Employee Training 17

5 MCM 4: Construction Stormwater Runoff Control 18

Compliance with Regulatory Requirements 18

BMP 4-1: Site Plan Review Procedures 19

BMP 4-2: Site Inspections & Enforcement of Erosion Control Measures 19

BMP 4-3: Construction Site Waste Control Requirements 19

6 MCM 5: Post Construction Stormwater Management in New Development and Redevelopment 20

Compliance with the Regulatory Requirements 20

City Site Plan Review Stormwater Requirements 21

7 MCM 6: Good Housekeeping and Pollution Prevention for Municipal Operations 23

Compliance with Regulatory Requirements 23

BMP 6-1: Parks and Open Space Operations and Maintenance 24

Description: 24

Responsible Department 24

BMP 6-2: Buildings and Facilities 24

Description 24

BMP 6-3: Vehicles and Equipment 25

Description: 25

Responsible Department: 25

Stormwater Infrastructure Operations and Maintenance 25

BMP 6-4: Street/Parking Lot Sweeping 25

Description: 25

BMP 6-5: Catch Basin Cleanings 25

Description: 25

BMP 6-6: Stormwater Treatment BMP Inspection and Maintenance 26

BMP 6-7: Winter Road Maintenance 27

Description: 27

Requirements for chloride-impaired waters (Appendix H) 27

BMP 6-8: Stormwater Pollution Prevention Plans (SWPPPs) 27

Description: 27

BMP 6-9: Nitrogen Source Identification Report 28

Description: 28

BMP 6-10: Stormwater BMP Retrofit Evaluation/Inventory 28

Description: 28

8 Annual Report Checklist 29

MCM 3: Illicit Discharge Detection and Elimination (IDDE) 30

MCM5: Post-Construction Stormwater Management for New Development and Redevelopment 30

MCM6: Operations and Maintenance (O&M) Program 30

Nitrogen Source Identification Report 31

9 Appendices 32

Appendices

A. Copy of Notice of Intent and EPA NPDES Authorization Letter
B. ESA Eligibility Documentation
C. Education Outreach Materials
D. Illicit Discharge Detection and Elimination (IDDE) Plan
E. IDDE Inspection Results and Data
F. DRAFT Operations and Maintenance (O&M) Plan
G. O&M Logs and Compliance Tracking
H. DRAFT Salt Reduction Plan
I. Employee Training Records

Authorization

The City of Portsmouth, New Hampshire ("Portsmouth") has been granted permit coverage under the 2017 New Hampshire General Permit for Stormwater Discharges associated with Small Municipal Separate Storm Sewer Systems (MS4) by the Environmental Protection Agency via a Letter of Authorization dated 06/12/2019.

The Notice of Intent (NOI) Form and the EPA Letter of Authorization can be found at the following web address below and in Appendix A.

Web address: Reports | City of Portsmouth

Certification

"I certify under penalty of law that this document and all attachments were prepared under my direction or supervision in accordance with a system designed to assure that qualified personnel properly gathered and evaluated the information submitted. Based on my inquiry of the person or persons who manage the system, or those persons directly responsible for gathering the information, the information submitted is, to the best of my knowledge and belief, true, accurate, and complete. I am aware that there are significant penalties for submitting false information, including the possibility of fine and imprisonment for knowing violations."

Printed Name: Karen Conard

Signature: **Date:**

Title: City Manager

Page left blank intentionally

Introduction

Permit Background

On January 18, 2017, EPA Region 1 renewed its General Permit for Stormwater Discharges associated with Small Municipal Separate Storm Sewer Systems (MS4) to replace its 2003 MS4 Permit. The MS4 Permit authorizes stormwater discharges from "traditional" (i.e., cities and towns) and "non-traditional" (i.e., Federal and state agencies) MS4 Operators located in the "Urbanized Area" as defined by the 2010 Census Bureau. This 2017 MS4 Permit ("MS4 Permit") became effective on July 1, 2018, and has been administratively continued. The 2017 MS4 Permit will remain in effect for discharges authorized prior to July 1, 2023, until they are authorized under a reissued general permit or individual permit.

The City had also obtained coverage under the 2003 MS4 Permit and has initiated ongoing educational and preventative measures to minimize potential pollutant contributions associated with stormwater discharges. It is important to note that the Pease International Tradeport, although located within the City boundaries, is a separate regulated entity and has its own separate permit responsibilities and authorization and, thus, its facilities and roadways under its jurisdiction are not included in this SWMP or the O&M Plan.

SWMP Background

This Stormwater Management Program (SWMP) describes the City's plan to address the 2017 MS4 Permit requirements and minimize any impact on water quality in receiving water bodies due to runoff from its facilities and storm drain system. The Plan is a "Living Document" and will be updated during the permit term as new information is developed and/or practices are modified, changed or updated to meet permit conditions. The need for SWMP updates will be assessed as part of the Annual Reporting process completed by end of September of each year.

Similar to the 2003 Permit, the 2017 MS4 Permit requires the following Six Minimum Control Measures (MCMs) to be part of the City's Stormwater Management Program:

- **MCM1: Public Education and Outreach.** A program to deliver educational messages to residents, businesses, institutions, developers and contractors who perform activities that may affect stormwater quality and discharges to receiving waters.
- **MCM 2: Public Involvement and Engagement.** An opportunity to allow the public to participate and provide comments on the stormwater program.
- **MCM 3: Illicit Discharge Elimination Program**. A program to effectively detect and eliminate illicit discharges within the MS4 regulated area.
- **MCM 4: Construction Site Erosion Control Review and Inspections.** A program to ensure that proper sediment and erosion control measures are included on construction projects disturbing more than one acre and inspected for effectiveness.
- **MCM 5: Post-Construction Stormwater Controls.** A program to ensure that adequate post-construction stormwater measures are included on development projects in the MS4 regulated area and these stormwater controls are maintained.
- **MCM 6: Good Housekeeping and Pollution Prevention for Municipal Operations.** A program to ensure that stormwater pollution sources associated with municipal properties and facility operations and maintenance activities are minimized.

Requirements for Water Quality Limited and Impaired Waters

The 2017 MS4 Permit imposes additional requirements for stormwater discharges to impaired or water quality limited water bodies including enhanced good housekeeping measures and source control plans for chloride and nutrient impaired waters. **Table 1.2** summarizes the additional requirements for water quality impairments and pollutants of concern.

Table 1.2: Summary of Activities to Address Water Quality Limited Requirements

Chloride Impaired Waters	› Developed a Salt Reduction Plan in June 2021 that describes various operational and salt use efficiency measures for roadways located in chloride impaired waters. › Sample for chloride as part of IDDE outfall screening.
Bacteria Impaired Waters	› As part of dry and wet weather sampling, collect samples for bacteria. › Categorized outfalls discharging to bacteria impaired waters as high priority for IDDE screening. › Continue to post and provide annual pet waste cleanup messages including signs in parks & other areas.
Nitrogen Impaired Waters	› Analyze for total nitrogen during dry weather outfall screening and sampling. › Increased street sweeping to at least twice/year. › Annual educational messages for pet waste, fertilizer & septic systems › Develop a Nitrogen Source Identification Plan (completed in June 2022) › Identify feasible locations for at least 1 stormwater BMP retrofits (City installed two large BMPs behind the DPW facility in 2018)

Stormwater Team

Primary Contact

James T. McCarty
Operations Manager – GIS and Stormwater
(603) 766-1410
jtmccarty@portsmouthnh.gov

Secondary Contacts

City Engineer
(603) 766-1421
esfiedler@Portsmouthnh.gov

Stormwater and Water Quality GIS Specialist
(603) 427-1530
ctvakili@Portsmouthnh.gov

GIS & Stormwater Manager
(603) 766-1410
jtmccarty@Portsmouthnh.gov

Environmental Planner/Sustainability Coordinator
(603) 610-7215
plbritz@Portsmouthnh.gov

Assistant City Engineer
(603) 610-7304
zmcronin@Portsmouthnh.gov

Utilities Inspection and Maintenance Foreman
(603) 427-1530
ksnyder@Portsmouthnh.gov

Stormwater Outfalls and Receiving Water Bodies

The City currently has identified approximately 205 stormwater outfalls that are within the Urbanized Area and discharging to waters of the United States. As such, these outfalls are considered subject to the MS4 Permit. A map of the identified outfalls and receiving waters is provided in **Appendix C** or can be found on the City DPW web site at https://portsmouthnh.maps.arcgis.com/apps/webappviewer.

Table 1.1 below provides a summary of the number of outfalls that drain to each water body assessment unit and the relevant water quality impairments according to the state's 2024 303(d) list of impaired waters. Since the 303(d) list of impairments is updated every 2 years, the water quality impairments may change with new ones added and/or existing impairments may be removed as well as the addition of new TMDLs. The City will report on any changes to the receiving waters list with each future annual report.

Table 1.1: Summary of Receiving Waterbodies in Portsmouth

Waterbody Segment that Receives Flow from the MS4	No. of Outfalls into Receiving Water AU	Primary Impairments					Other Pollutant(s) Causing Impairments
		Nitrogen	Phosphorous	Bacteria	Chloride	Solids, Metals, Oil and Grease	
NHEST600031001-02-02 *Lower Piscataqua River - South*	30			X			Enterococcus, Estuarine Bioassessments, Dioxin, Mercury, PCBs
NHEST600031001-03 *Upper Sagamore Creek*	38	X		X			Acenaphthylene, Aluminum, Arsenic, Benzo(a)pyrene (PAHs), Benzo(a)anthracene, Cadmium, Chrysene (C1-C4), Copper, Chlorophyll-a, Dibenz(a,h)anthracene, Dioxin, Enterococcus, Estuarine Bioassessments, Fluoranthene, Lead, Mercury, Nickel, Total Nitrogen, PCBs, Phenanthrene, Pyrene, Trans-Nonachlor
NHEST600031001-04 *Lower Sagamore Creek*	5	X		X			Estuarine Bioassessments, PCBs, Dioxin, Chlorophyll-a, Dissolved Oxygen, Mercury, Total Nitrogen, Enterococcus
NHEST600031001-05 *Back Channel*	7						Estuarine Bioassessments, Light Attenuation, PCBs, Dioxin, Mercury
NHEST600031001-09 *South Mill Pond*	16			X			PCBs, Dioxin, Mercury, Enterococcus
NHEST600031001-10 *North Mill Pond*	40			X			PCBs, Dioxin, Mercury, Enterococcus
NHRIV600030901-04 *Haines Brook – Unnamed Brook*	2						Mercury
NHRIV600030904-06 *Pickering Brook*	13			X	X		Copper, Dissolved Oxygen, Dissolved Oxygen Saturation, Iron, pH, Mercury, Chloride, Enterococcus, Escherichia coli
NHRIV600031001-02 *Unnamed Brook – To Piscataqua River*	12						Mercury
NHRIV600031001-03 *Sagamore Creek*	10			X	X		Dissolved Oxygen, pH, Chloride, Dissolved Oxygen Saturation, Enterococcus, Mercury, Escherichia coli
NHRIV600031001-04 *Lower Hodgson Brook*	9			X	X		Benthic-Macroinvertebrate Bioassessments (Streams), Chloride,

Waterbody Segment that Receives Flow from the MS4	No. of Outfalls into Receiving Water AU	Primary Impairments					Other Pollutant(s) Causing Impairments
		Nitrogen	Phosphorous	Bacteria	Chloride	Solids, Metals, Oil and Grease	
							Dissolved Oxygen, Dissolved Oxygen Saturation, pH, Enterococcus, Mercury, Escherichia coli
NHRIV600031001-05 *Upper Hodgson Brook*	5			**X**	**X**		Benthic-Macroinvertebrate Bioassessments (Streams), Chloride, Dissolved Oxygen Saturation, Dissolved Oxygen, Manganese, pH, Mercury, Escherichia coli, Habitat Assessments
NHRIV600031001-06 *Grafton Ditch*	3						Aluminum, Arsenic, Chromium (total), Copper, Iron, Lead, Manganese, Zinc, Mercury
NHRIV600031001-09 *Borthwick Ave. Tributary*	10			**X**	**X**		Chloride, Dissolved Oxygen Saturation, Dissolved Oxygen, pH, Mercury, Iron, Chloride, Escherichia coli
NHRIV600031001-10 *Newfields Ditch*	11			**X**			Chloride, Dissolved Oxygen Saturation, pH, Mercury, Escherichia coli
NHRIV600031001-21 *Unnamed Brook*	1						Mercury
NHRIV600031001-24 *Unnamed Brook to Back Channel*	2						Mercury
NHRIV600031002-01 *Berry's Brook*	8			**X**			Dissolved Oxygen, pH, Mercury, Dissolved Oxygen Saturation, Escherichia coli
Grand Total	**222**						

Note:
1. Unnamed Brook – Sagamore Creek Dam (NHIMP600031001-01) does not appear to have outfall points from the City's MS4 and has been removed
2. Unnamed Brook to Unnamed Marsh (NHRIV600030904-07) does not appear to have outfall points from the City's MS4 and has been removed
3. Unnamed Brook to Back Channel (NHRIV600031001-21) changed to Unnamed Brook
4. Unnamed Pond (NHLAK600031001-01) does not appear to have outfall points from the City's MS4 and has been removed

Endangered Species and Historic Property Eligibility

Portsmouth met the eligibility requirements under the previous 2003 permit and continues to carry the eligibility status under the 2017 MS4 permit. The following reflects the selected criteria used to indicate eligibility for Endangered Species and Historical Resources.

Endangered Species Documentation

Portsmouth has determined eligibility for the ESA under:

Criterion A: ☒ Criterion B: ☐ Criterion C: ☐

Criterion A: *No endangered or threatened species or critical habitat are in proximity to the stormwater discharges or discharge related activities*.

On September 24, 2018, the US Fish and Wildlife Service (USFWS) issued a general letter for NH MS4 communities stating that the proposed stormwater discharge activities covered under the 2017 NH Small MS4 General Permit *may, but are not likely to adversely affect*, federally listed threatened and endangered species and any species' critical habitat provided that no new construction or major land disturbances are needed to meet the MS4 permit requirements.

The EPA Letter of Authorization received by the City on June 12, 2019, also states that adverse effects to federally-listed species are not expected due activities conducted to meet the MS4 permit requirements. However, if structural measures are proposed or if new information reveals the presence of additional listed species may be affected by the planned activities, the City will consult with the USFWS office, as necessary, by contacting David Simmons at (603) 227-6425 in the Concord, NH office to seek further assistance. (USFWS letter and IPaC results are contained in **Appendix B**).

Historic Property Documentation

Portsmouth has determined permit eligibility for Historic Properties under:

Criterion A: ☐ Criterion B: ☒ Criterion C: ☐ Criterion D: ☐

Criterion B: *The stormwater discharges and allowable non-stormwater discharges do not have the potential to influence historic properties and discharge-related activities (i.e. construction and/or installation of stormwater control measures that involve subsurface disturbance) will not affect historic properties.*

MCM 1: Public Education and Outreach

MCM 1: Overall Goal

Consistent with the 2017 MS4 Permit, the overall goal of the Public Education and Outreach Program is to increase awareness and educate residents and other key audiences on best practices to minimize adverse effects on receiving water quality resulting from stormwater discharges in the MS4 area.

Educational Program Requirements

The type and number of educational messages that need to be disseminated each year to the targeted audiences depends on whether there are water quality impaired water bodies within the MS4 area. If there are no water quality impairments, the City is required to deliver at least two (2) messages to each of four (4) targeted audiences every other year over the duration of the permit term. The targeted audiences include:

- **Residents**
- **Businesses, Institutions, and Commercial Facilities**
- **Developers, Engineers and Construction Contractors**
- **Industrial Facilities**

However, if the City discharges stormwater to either bacteria or nutrient impaired water bodies, then additional educational messages must be distributed ***annually for residents and businesses/commercial entities*** to try to modify behaviors and reduce bacteria and/or nitrogen source contributions associated with certain activities per Appendix H requirements.

Since the City discharges stormwater to both bacteria and nitrogen impaired waters based on the 2016 303(d) list and the EPA Authorization letter, respectively, additional education messages are required as outlined Table 1.3 below. The required messages for bacteria and nitrogen impaired waters overlap with respect to enhancing pet waste control/cleanup and septic system management. For nitrogen impaired waters, additional annual messages are required to improve grass clipping and leaf litter disposal /management and encourage less fertilizer use or, at a minimum, only use slow-release fertilizers for lawn management.

The Permit also requires the City to evaluate the effectiveness of the messages and report on the overall progress in achieving the educational goals of the program. Ideally, the effectiveness of these message will be measured not only by the number of messages delivered or participants at each event but by noticeable changes in human behaviors or in the way pollutant sources are managed (e.g., less pet waste observed in public dog walking areas, less grass clippings left on paved surfaces, more yard waste collected at the Transfer Station, less leaves raked into public streets and/or, more importantly, observed improvements in water quality conditions in the area water bodies). Any of these observances are examples of reportable items for the Annual Reports.

Table 1.3 outlines the City's planned education BMPs, message type, distribution methods, frequency and/or targeted year for distribution. The technical content for these messages will be derived mainly from educational materials developed by the Piscataqua Region Estuary Partnership (PREP), UNH Stormwater Center and the UNH Cooperative Extension as part of a

collaborative effort with municipal members of the Seacoast Stormwater Coalition. Selected public education messages and materials will be retained in Appendix C of this document.

Best Management Practices for Public Education

Table 1.3: Summary of the Planned Educational BMPs for each Target Audience by Year

Educational BMP[1]	Target Audience	Target Month / Season	Schedule by Permit Year (Fiscal Year)			
			7 FY25	8 FY26	9 FY27	10 FY28
1-1: Pet Waste Flyers/Post Card/Signage	Residents and Businesses	March/April[2]	X	X	X	X
1-2: Grass Clipping /Slow-Release Fertilizer Fact Sheet	Residents and Businesses	April/May	X	X	X	X
1-3: "Get Pumped" Septic System Brochure	Select Residents[4]	Sept.	X	X	X	X
1-4: Leaf Litter Disposal Fact Sheet	Residents and Businesses	October	X	X	X	X
1-5: Green SnowPro / Salt Efficiency Fact Sheet	Businesses	Fall / Winter		X		X
1-6: Erosion Control SWPPP Factsheet	Developers (Construction)	Spring	X		X	
1-7: Low Impact Development Factsheet	Developers (Construction)	Summer			X	
1-8: Lawn Maintenance Water Use Factsheet	Industrial Facilities	Spring		X		X
1-9: Waste Disposal/Spill Prevention Factsheet	Industrial Facilities	Fall				X

Notes: [1]The technical content for these BMPs messages is anticipated to be provided by regional educational outreach organizations such as the Piscataqua Region Estuaries Partnership or UNH Cooperative Extension and modified as appropriate for the target audience.
[2]The nitrogen impairment requirements specified in Appendix H suggest a June /July time frame for dog waste messaging, however, for residents, the messaging would be best during the City dog license renewal period of March - April, which is more aligned with the bacteria impairment requirements in Appendix H.
[3] Similar fact sheets and messages can be used for businesses and commercial facilities as those used for residents, however, different methods of delivery will likely be utilized.
[4] Select residents refer to the relatively few areas in Portsmouth that are not connected to the sanitary sewer system.

BMP 1-1: Pet Waste Educational Flyer / Post Cards / Signage (done annually)

- **Description:** The City will distribute and post educational flyers and/or post cards at various locations throughout the City to encourage residents to cleanup and properly dispose of pet waste. The City has one dog park and several parks frequently used by dog owners.
- **Target Audience(s):** Residents, Businesses, Institutions, and Commercial Facilities
- **Responsible Department/Parties:** DPW Operations/Parks and Recreation
- **Measurable Goal(s):** Increase the number and maintenance of dog waste stations and reduce the number of observed incidences where dog waste is left on the ground in dog walking locations.
- **Timeline:** Annually March/April (dog license renewal period);

BMP 1-2: Lawn Maintenance / Fertilizer Use Fact Sheet (done annually)

- **Description:** The City will collaborate with the PREP "Green Grass & Clear Water" Program to distribute educational materials/videos to encourage residents to use less fertilizers or at a minimum, slow-release fertilizers as well as properly dispose or recycle grass clippings. Education materials will generally include other information related to stormwater and water quality issues and will be distributed each Spring.
- **Target Audience(s):** Residents, Businesses, Institutions, and Commercial Facilities
- **Responsible Department/Parties:** DPW Operations/ Planning Department
- **Measurable Goal(s):** Increase the adoption or conversion to slow-release fertilizers and reduce the amount of fertilizer usage by reducing applications and/or the amount of treated area done by commercial applicators, landscapers and homeowners. The fact sheet would focus on highlighting the adverse effects of fertilizer use on water quality and promote more cost-effective and sustainable measures for maintaining "healthy" lawns.
- **Timeline:** Annually in April and May

BMP 1-3: "Get Pumped" Septic System Brochure

Document Name and/or Web Address: https://getpumpednh.com/

- **Description:** The City will distribute educational brochures to homes not serviced by sanitary sewer to encourage residents to pump out their septic systems. The "Get Pumped" program provides a list of septic haulers participating in a rebate program to encourage pump outs.
- **Target Audience(s):** Residents
- **Responsible Department/Parties:** DPW Operations
- **Measurable Goal(s):** Increase septic system pump-out frequency and septage volume delivered to City WWTF to reduce potential for system failure and poor performance and non-serviced areas.
- **Timeline:** Annually in September - October

BMP 1-4: Leaf Litter / Yard Waste Fact Sheet (done annually)

Web Address: https://www4.des.state.nh.us/nh-ms4/wp-content/uploads/2019/

- **Description:** Distribute NHDES yard-waste brochures detailing proper lawn maintenance including clipping disposal and leaf litter/yard waste disposal or proper composting. Messages will be distributed each Fall to increase effectiveness.
- **Target Audience(s):** Residents, Businesses, Institutions, and Commercial Facilities
- **Responsible Department/Parties:** DPW Operations
- **Measurable Goal(s):** Increase the amount of yard waste /leaf litter brought to the transfer station each year as an alternative to dumping in backyard areas.
- **Timeline:** Annually in Sept - October

BMP 1-5: Green SnowPro Certification/ Salt Minimization Fact Sheet (completed in 2022)

- **Description:** To reduce the effects on the chloride impaired waters, the City will distribute a fact sheet to businesses and institutions within the community to highlight tools and resources to promote greater efficiency in deicing procedures, contractor training and snow storage.
- **Target Audience(s):** Businesses, Institutions, and Commercial Facilities
- **Responsible Department/Parties:** DPW Operations/Seacoast Stormwater Coalition
- **Measurable Goal(s):** Increase the number of business property owners that utilize Green SnowPro Certified applicators.
- **Timeline:** 2026

BMP 1-6: Site Plan Review Erosion Control Fact Sheet/ Checklist (completed in 2020)

- **Description:** A brief factsheet and checklist detailing standard erosion control inspection process for new and redevelopment projects. The checklist with outline standard erosion control measures that should be considered and included on site plans for new construction.
- **Target Audience(s):** Developers (Construction)
- **Responsible Department/Parties:** DPW Operations/Planning Department
- **Measurable Goal(s):** Increase the use and proper maintenance of erosion control measures at construction projects and reduce the number of incidences of observed tracking or sediment erosion at construction sites.
- **Timeline:** to be repeated in 2025

BMP 1-7: Low Impact Design and BMP Fact Sheet (completed in 2022)

- **Description:** The City will disseminate a factsheet promoting the benefits of LID design and practices to encourage more use of LID practices in new and redevelopment projects. The City will also work with developers and consultants to utilize LID practices as well as track pollutant reductions using the UNH stormwater PTAPP tracking methodology.
- **Target Audience(s):** Developers (Construction)
- **Responsible Department/Parties:** DPW Operations/Planning Department
- **Measurable Goal(s):** Increase the use of LID design and BMP practices such as permeable pavement if applicable to reduce the amount of impervious cover in new and redevelopment projects.
- **Timeline:** to be repeated in 2027

BMP 1-8: Lawn Maintenance/Water Use Factsheet (completed in 2021)

- **Description:** A factsheet detailing more sustainable lawn maintenance or alternative landscaping as well as irrigation practices for industrial facilities. The factsheet will provide tools and resources to promote greater water use efficiency and related water quality information with respect to lawn maintenance.
- **Target Audience(s):** Industrial Facilities
- **Responsible Department/Parties:** DPW Operations/Planning Department
- **Measurable Goal(s):** Update/distribute new factsheet every other year to improve lawn irrigation efficiency and minimize chemical applications.
- **Timeline:** to be repeated in 2028

BMP 1-9: Spill Prevention /Waste Disposal Factsheet (completed in 2023)

- **Description:** A brief factsheet describing tools and resources for spill prevention and waste disposal measures for industrial facilities that handle, and store regulated substances.
- **Target Audience(s):** Industrial Facilities and Applicable Businesses
- **Responsible Department/Parties:** DPW Operations/Planning Department
- **Measurable Goal(s):** Update/distribute new factsheet every other year to enhance awareness and improve timely reporting and permit compliance.
- **Timeline:** to be repeated in 2029

Annual Reporting Elements

For each Annual Report, due at the end of September following each Permit year, the City will summarize what types of messages were delivered to specific audiences, the method of delivery and any feedback or any observed changes in behavior or improvements in reducing pollutant sources (e.g. less dog waste accumulation on the ground, less grass clippings or leaves on the road, more leaf litter collected, etc.). Any potential changes or opportunities to improve future message delivery and/ or effectiveness will also be noted

MCM 2: Public Involvement and Participation

MCM 2: Goal

Consistent with Part 2.3.3 of the 2017 MS4 Permit, the overall goal of the public involvement and participation program is to provide opportunities for the public to participate in the review and implementation of the SWMP.

Compliance with Regulatory Requirements

Consistent with Section 2.3.3.1 of the Permit, the City will post the final SWMP and future Annual Reports to provide an opportunity for public review and comment. The preferred method to satisfy this requirement is making the documents available online. In addition to the SWMP, the City will post relevant education materials and information on related activities undertaken to encourage public participation in stormwater related activities.

Best Management Practices for Public Involvement

The City typically hosts several events and provides opportunities for presentations to inform residents on stormwater and other environmental-related issues. **Table 2.1** provides a summary of the planned public involvement and participation BMPs consistent the permit requirements. Each of these current and proposed BMPs are described in greater detail below.

Table 2.1: Summary of the Planned Public Involvement/Participation BMPs

BMP Category	BMP Description	Responsible Parties	Implementation Year
Public Review (2.3.3.1)	BMP 2-1: Post Stormwater Management Plan on City's website for public review	*DPW/City Hall*	*2019*
Public Participation (2.3.3.2)	BMP 2-2: Solicit public comment on Stormwater Management issues and concerns via City web site	*DPW/City Hall*	*2019*
	BMP 2-3: Public will stencil catch basins prohibiting illicit discharges	*DPW Operations*	*2020*
	BMP 2-4: Public will participate in City led roadside and general litter cleanup	*DPW Operations*	*Ongoing*
	BMP 2-5: City typically holds hazardous waste/oil collections days for public	*DPW Operations*	*Ongoing (2x/year)*

Public Review

BMP 2-1: SWMP Review

- **Web Address:** https://www.cityofportsmouth.com/publicworks/stormwater/
- **Description:** The City has posted a link to its SWMP as well as other stormwater documents on its Stormwater page within the City web site for public review.
- **Responsible Department/Parties:** DPW Operations/City Hall
- **Measurable Goal(s):** Update and post the SWMP annually.
- **Timeline:** Completed in 2019

Public Participation

BMP 2-2: Stormwater Program Public Input

- **Description:** The City's online "Click and Fix" system allows residents to submit comments on stormwater or any other related issues in the City. Comments may include any observed blockages, backups, illicit discharges, violations, or other concerns.
- **Responsible Department/Parties:** DPW Operations/City Hall
- **Measurable Goal(s):** Collect and track amount of public input and any actions taken.
- **Timeline:** Completed in 2019

BMP 2-3: Catch Basin Marking and Stenciling

- **Description:** An ongoing program where the public can assist in stenciling messages on catch basins. Stencil messages commonly include information about discharging waterbodies, notification of no dumping, and more.
- **Responsible Department/Parties:** DPW Operations
- **Measurable Goal(s):** Track the number of stencils/participants annually.
- **Timeline:** Completed in 2020

BMP 2-4: Roadside/General Cleanups

- **Description:** An existing municipal program where the public may participate in collecting roadside/general litter. Cleanup efforts will be chosen based on need and amount of community involvement.
- **Responsible Department/Parties:** DPW Operations
- **Measurable Goal(s):** Track the number of participants and litter collected.
- **Timeline:** Ongoing

BMP 2-5: Hazardous Waste/Used Oil Collection

- **Description:** The Department of Public Works holds hazardous waste collection events twice per year. Items/dates that can be collected will be provided to the public.
- **Responsible Department/Parties:** DPW Operations
- **Measurable Goal(s):** Hold two events per year and track the amount of waste collected.
- **Timeline:** Ongoing

MCM 3: Illicit Discharge Detection and Elimination (IDDE) Program

MCM 3: Goal

Consistent with Part 2.3.4 of the 2017 MS4 Permit, the overall goal of the Illicit Discharge Detection and Elimination (IDDE) program is to establish a process to systematically find and eliminate any illicit sources of non-stormwater discharges into the City's storm drain system, as well as implement procedures to prevent such discharges.

Compliance with Regulatory Requirements

Table 3.1 summarizes the required IDDE BMPs included in the Permit, their current status relative to the required completion dates as specified in the 2017 MS4 Permit. The specific details of each of these components are described in the following sections.

Table 3.1: Summary of Major IDDE Compliance Tasks

IDDE BMP	Subtask	Permit Section	Reference Location	Status	Required Completion Date
3-1: Legal Authority to Prohibit Illicit Connections	Establish ordinance, by-law, or other regulatory mechanism to prohibit illicit discharges	*2.3.4.a*	Ordinance Ch. 11, Art. 2 Ch. 16, Art. 2 Site Plan Sec. 8.3	Done	06-30-2019
3-2: Written Plan	IDDE Procedure Plan	*2.3.4.6.c*	See Appendix C	Done	06-30-2019
	Catchment Investigation Plan	*2.3.4.8.b*	TBD	Done	12-30-2019
3-3 Sanitary Sewer Overflow Inventory	Include Inventory in IDDE Plan	*2.3.3.4*	See Appendix C	Done	06-30-2019
3-4: Outfall Mapping	Phase I Mapping	*2.3.4.5.a*	City Website	Done	07-01-2020
3-5: Dry Weather Screening /Sampling	Outfall Categorization by Impairment	*2.3.4.7.a*	Phase I Map	Done	07-01-2020
	Dry Weather Screening/Sampling	*2.3.4.7.b.iii*	Initiated in 2019	Done	07-01-2021
3-6: Catchment Investigations	Investigation of Junction Manholes /Drainage Areas	*2.3.4.8.c*	Initiated in 2022	90% Complete	07-01-2028
	Wet Weather Sampling	*2.3.4.8.c.ii.2.b*	Initiated in 2021	73% Complete	07-01-2028
	Phase II Mapping	*2.3.4.5.b*	TBD	Complete but Ongoing	07-01-2028
3-7: Employee Training	IDDE Training for Select Employees	*2.3.4.11*	Initiated in 2022	Ongoing	07-01-2020

BMP 3-1: Legal Authority

Article 2 of the City's Utility Ordinance contains language that prohibits the discharge of non-stormwater flow into the municipal storm drain system. For any new development project, the ordinance requires a thorough review of any requested sanitary sewer connections as well as the proposed treatment of stormwater generated onsite. A more complete written IDDE plan can be found in the attached **Appendix D**.

BMP 3-2: Written Illicit Discharge Detection and Elimination Plan

A written IDDE Plan was completed prior to July 1, 2019 or one (1) year of the effective permit date to describe the specific procedures that will be used to perform and document the IDDE investigation activities as well as contain the following information:

The City's written IDDE plan can be found in the attached **Appendix D**.

BMP 3-3: Sanitary Sewer Overflow (SSO) Inventory

Per Section 2.3.3.4 of the Permit, the IDDE Plan includes an inventory of Sanitary Sewer Overflow (SSOs) that have occurred in the last 5 years (refer to **Appendix D)**. Any updates to this inventory will be included in the annual reports.

- Location (Approximate street crossing/address and receiving water)
- Statement indicating whether the discharge entered a surface water or MS4
- Date(s) and time(s) of each known SSO occurrence
- Estimated discharge volume(s)
- Description of occurrence including possible cause of overflow
- Completed mitigation/corrective measures
- Planned mitigation/corrective measures

Per the City's NPDES Permit, SSOs discharges are also reported to the New Hampshire Department of Environmental Services. The following personnel must be contacted immediately upon detection of an overflow;

Zach Cronin

- Assistant City Engineer: (603) 957-8795

BMP 3-4: Storm Outfall Mapping

Phase I Mapping: The City has completed the Phase I mapping requirements consistent with the Permit. Existing mapping efforts from the 2003 Permit have been updated and completed in accordance with the 2017 MS4 Permit. The Phase I mapping includes the following information:

- Outfalls and receiving waters (previously required by the MS4-2003 permit)
- Open channel conveyances (swales, ditches, etc.)
- Interconnections with other MS4s and other storm sewer systems
- State owned stormwater treatment structures
- Water bodies identified by name and indication of all use impairments as identified on the most recent 2016 NHDES List of Impaired Waters
- Initial catchment delineations. Topographic contours and drainage system information may be used to produce initial catchment delineations.

Phase II Mapping: Additional outfall features including the field-verified limits of the catchment area must be addressed in Phase II of the mapping requirements. Phase II mapping must be completed within ten (10) years of the effective date of the permit (July 1, 2028). The Phase II mapping requirements include the following information:

- Outfall spatial location (latitude & longitude with a minimum accuracy of +/-30 feet)
- Connecting Storm Drain Pipes and Open Channel Conveyances
- Catch basins and Manholes
- Refined catchment delineations. Catchment delineations must be updated to reflect information collected during catchment investigations.
- Municipal sanitary sewer system
- Municipal combined sewer system

Additional Mapping Considerations: Although not specifically required by the 2017 MS4 Permit, the following outfall features, and related information should be included in the geodatabase of the storm system:

- Storm drain material, shape, size (pipe diameter), age
- Interconnections from other or privately-owned stormwater treatment structures
- Locations where municipal sanitary sewer systems exist, properties known or suspected to be served by a septic system, especially in high density urban areas
- Areas where the storm drain system receives or could receive flow from septic systems
- Stormwater BMP Locations
- Inspection dates and work completed of past illicit discharge investigations
- Locations of suspected confirmed and corrected illicit discharges with dates and flow estimates.

BMP 3-5: Dry Weather Screening / Sampling

The City has completed its initial prioritization and ranking of outfalls and anticipates initiating the dry weather screening and sampling in the late summer and fall of 2019. The City has completed dry weather screening and sampling. The status of dry weather screening and sampling completed year was reported in annual reports.

BMP 3-6: Catchment Investigations

The City has developed a written Illicit Discharge Detection and Elimination (IDDE) Plan which includes procedures for catchment investigations (see Appendix D). Catchment

investigations began in 2019 and are ongoing. As of July 2025, 100% of all dry weather screening/sampling is complete; 90% of catchments have been inspected; and 73% of outfalls requiring wet weather sampling have been completed.

BMP 3-7: Employee Training

Annual training has been provided to employees involved with the IDDE Program including how to recognize illicit discharges and SSO's. The City will report on when, type and frequency of the IDDE training in the annual report.

MCM 4: Construction Stormwater Runoff Control

MCM 4: Goal

Consistent with Part 2.3.5 of the 2017 MS4 Permit, the overall goal of the Construction Site Stormwater Control Program is to establish a process where erosion control measures for new or redevelopment projects that disturb more than 1 acre of area are adequately reviewed and inspected during the construction period to minimize erosion and prevent sediment from entering into storm drain system and be discharged to waters of the U.S.

Compliance with Regulatory Requirements

Consistent with Part 2.3.5 of the MS4 Permit, the City has implemented an internal review and inspection program for erosion control measures and waste controls for projects disturbing one (1) acre or more to ensure adequate erosion measures are used to prevent sediment transport in stormwater. This includes disturbances of less than one acre if the disturbance is part of a larger common plan of development.

The 2003 MS4 permit required similar requirements to be in place by May 1, 2008. The City adopted local regulations to address the 2003 MS4 Permit provisions in 2007. The 2017 MS4 permit requires written procedures to be developed to describe the process involved in site plan review and approval for new construction projects that will disturb more than 1 acre. The procedures should focus on ensuring that adequate erosion control measures are included in project plans and that erosion control measures will be monitored during construction to assess their effectiveness. The key elements of the more recent 2017 MS4 permit requirements are summarized below in **Table 4.1**.

The current City regulations require submittal and review of the Stormwater Management and Erosion Control Plan for new development projects. The City regulations also establish authority to inspect and enforce erosion control measures as well as solid waste measures on construction sites. The current regulations, nonetheless, will likely be updated to address the enhanced treatment measures for MCM 5 and can add specific language to be more explicit regarding erosion control review and inspections.

Table 4.1: Summary of Key Erosion Control BMPs Required by the MS4 Permit

Plan Element	Permit Section	Status	Required Completion Date
4-1 Site Plan Review Regulations	*2.3.5.3.a*	Completed	**January-2021**
4-2 Site Inspection and Enforcement Written Procedures	*2.3.5.3.b*	Completed	**January-2021**
4-3 Waste Control Requirements	*2.3.5.3.d*	Completed	**January -2021**

Planned Regulation Updates: The City has completed its regulation updates adding more explicit language regarding construction site waste controls including measures to handle solid waste, sanitary waste and demolition debris consistent with the MS4 Permit.

BMP 4-1: Site Plan Review Procedures

The Stormwater Management Section (Sec 7.4) of the City's Site Plan Review Regulations requires any construction project subject to site plan review to have adequate erosion control measures in place prior to initiating soil disturbances. Projects subject to City site plan review include most new residential development or redevelopment that involves 3 residential units or new nonresidential development or redevelopment.

Sec. 7.4.4 of the Site Plan regulations require proposed development projects to include a Stormwater Management and Erosion Control (SMEC) Plan that describes the proposed erosion control measures to be used, their locations, the installation timeline, temporary and permanent stabilization measures, inspection protocols and frequency, reporting and maintenance requirements. Site plan review utilizes a Technical Advisory Committee (TAC), which includes at least one member of the Department of Public Works, to evaluate the proposed erosion control and stormwater treatment measures as part of the development application. The review process will be described in the first annual report.

BMP 4-2: Site Inspections & Enforcement of Erosion Control Measures

Under Section 2.16.1 of the City's Site Plan Regulations, the Planning Board reserves the right to require routine site inspections to ensure compliance with the approved plans.

The City may delegate inspections to a licensed engineer or other qualified individual. The City also has its own inspection personnel on staff as part of multiple departments. These inspections are documented and shared with the Code Enforcement Officer and Department of Public Works as relevant issues arise.

As part of any future regulation updates will be reported in future annual reports. The City will review the current site plan review language and identify opportunities to provide greater clarity on the erosion control submittal and inspection requirements for Planning Board members, City personnel and development applicants to help make sure provisions are in place consistent with the MS4 permit requirements.

BMP 4-3: Construction Site Waste Control Requirements

Section 9.2 of the City's Site Plan Regulations establishes on-site waste management and disposal standards for property owners. The regulations require that adequate storage containers be available onsite to store and contain solid and liquid waste generated onsite. The review of adequacy generally falls to the Planning Department and Public Works Department. Although the regulations may not be entirely explicit regarding construction site debris and temporary sanitary waste facilities during construction, the regulations generally cover all aspects of onsite waste generation and disposal.

MCM 5: Post Construction Stormwater Management in New Development and Redevelopment

MCM 5: Goal

Consistent with Part 2.3.6 of the 2017 MS4 Permit, the overall goal of the Post-Construction Stormwater Management Program is to adopt or update local stormwater regulations to ensure adequate stormwater treatment measures are included in new and/or redevelopment projects that will disturb 1 acre or more of area and to ensure these stormwater treatment measures are maintained to preserve the water quality treatment functions of the proposed BMP. As noted below, the level of stormwater treatment needed will depend on any water quality impairment linked to the receiving water body.

Compliance with the Regulatory Requirements

The City's Site Plan regulations, in large part, include many of the MS4 provisions related to post-construction stormwater management for new and redevelopment projects. However, the City will review and update their stormwater management regulations, as appropriate, to align with Southeast Watershed Alliance Stormwater Model Regulations as referenced in the 2017 MS4 Permit when the Model Regulations are finalized. It is anticipated that the Model Regulations will be finalized in next few months to allow Communities to update the local regulations within the 2-year time frame from the effective permit date or July 2020. **Table 5.1** summarizes the key requirements of the 2017 MS4 permit for new and redevelopment.

Table 5.1: Summary of Key Regulatory Requirements

Plan Element	Sub-Task	Permit Section	Status	Completion Date
5-1: Post-Construction Ordinance / Regulations	Low Impact Development (LID) must be used to maximum extent	*2.3.6.a.ii.a*	Completed	Jan. 2021
	Salt/snow storage and loading designed according to NHDES guidance	*2.3.6.a.ii.b*	Completed	
	Select/Design infiltration practices in accordance with NH Stormwater Manual	*2.3.6.a.ii.c*	Completed	
	New Development - Enhanced Stormwater control/treatment	*2.3.6.a.ii.d*	Completed	
	Redevelopment - Stormwater control/treatment	*2.3.6.a.ii.e*	Completed	
	Submit As-Built Plans	*2.3.6.b*	Completed	Jan. 2021
5-2: Street/Parking Lot Design Guidelines	Review/ adopt guidelines to minimize new impervious cover and promote LID	*2.3.6.c*	Completed	May-2022
5-3: Green Infrastructure	Review zoning and design guidance to promote use of green infrastructure	*2.3.6.d*	Completed	May -2022
5-4: Retrofit Inventory / Priority Ranking	Review City-owned property to identify potential locations for SW retrofits or improved BMPs	*2.3.6.e*	Completed	May -2022

City Site Plan Review Stormwater Requirements

Table 5.2 provides a comparison of the City's current regulations to the 2017 MS4 Permit post-construction stormwater requirements:

Table 5.2: Comparison of Current Regulations to the 2017 MS4 Requirements

Post-Construction Stormwater Provision	Current City Requirement	MS4 Requirement
Enhanced Storm Water Treatment for Water Quality	1. For storm events of ½ inch or less, the applicant shall demonstrate that stormwater management practices will remove contaminants from stormwater runoff that leave the sites. 2. All applications shall minimize the area of impervious surfaces and address the potential negative impact of impervious surfaces on surface and groundwater resources. 3. All projects that require a stormwater permit from NHDES shall comply with the AoT standards with respect to the export of total suspended solids and/or nutrients such as phosphorous and nitrogen. If projects do not require a stormwater permit from the NHDES, it shall be designed to minimize the export of phosphorous from the site to an extent reasonable with the proposed use and the characteristics of the site.	1. Require BMPs designed to retain the WQV (1-inch rain consistent with AoT) calculated in accordance with Env-Wq 1540.10; Or 2. Require BMPs designed to provide 90% TSS and 60% nutrient removal for new development, and: 80% TSS and 50% Removal for Redevelopment; The Permit encourages BMPs to optimize nitrogen removal. 3. Offsite mitigation can be used to meet the pollutant removal equivalent within same watershed as discussed in updated SWA model regulations and EPA guidance manual.
As-Built Plans	At the completion of the project, the applicant shall submit to the Planning Director three (3) copies of an "as-built plan" which shall include all surface and subsurface features, easements, licenses, rights-of-way, and maintenance agreements. The plan shall be prepared and stamped by a New Hampshire licensed land surveyor.	The current City Reg is consistent with MS4 Permit, with the exception that the MS4 permit sets a time frame for as-built submittal of no more than 2 years after project completion.
Street/ Parking Lot Design Guidelines	Sec 4.3 states that every effort shall be made to use pervious parking and pathway surfaces as an alternative to impervious asphalt or concrete for overflow parking areas, except in cases where it is determined that a traditional impervious parking lot with engineered stormwater systems renders greater protection of surface and groundwater resources than pervious pavement	Within 4 years of the effective permit date, the City shall develop a report that assesses the current street and parking lot design standards that affect the creation of impervious cover and modify standards to promote LID options. Completed
Green Infrastructure	Applicants shall demonstrate why on-site infiltration approaches are not possible or adequate before proposing the use of conventional systems that rely on collection and conveyance to remove runoff from the site.	Within 4 years of the effective permit date, the City shall develop a report to assess local regulations to identity appropriate modifications to promote LID site planning and require that LID design strategies be used to the maximum extent feasible to reduce

Post-Construction Stormwater Provision	Current City Requirement	MS4 Requirement
		the discharge of stormwater from new development. Completed
Stormwater BMP Retrofit Inventory	The City has implemented several existing SW BMPs. An inventory of these BMPs should be included in this SWMP.	Within 4 years of the effective permit date, the City will need to develop an inventory and priority rank all City-owned property in terms of stormwater BMP retrofit potential. Beginning with the 5th Annual Report and each subsequent Annual Report, the City shall report on progress in implementing BMP retrofits to mitigate effects from existing IC area

Regulation Updates: The City has updated its site plan regulations to enhance the stormwater treatment requirements in January 2021 as required by the MS4 Permit.

MCM 6: Good Housekeeping and Pollution Prevention for Municipal Operations

MCM 6: Goal

Consistent with Part 2.3.7 of the 2017 MS4 Permit, the overall goal is to develop a City-wide operations and maintenance program that emphasizes source control and minimizes the amount of pollutants being exposed and transported by stormwater runoff into nearby water bodies from the City roadways, facilities and maintenance activities, as well as to maintain the functional integrity of the stormwater infrastructure system.

Compliance with Regulatory Requirements

Consistent with Part 2.3.7 of the Permit, the City has developed a Draft Operations and Maintenance (O&M) Plan to describe specific protocols to guide City personnel in performing good housekeeping and pollution prevention measures at its facilities (Appendix E). The O&M Plan was completed by July 2020 or 2 years from the effective Permit date.

The following provides a brief description of the major components, or Best Management Practices (BMPs) that are included in the O&M Plan consistent with Part 2.3.7 of the Permit and includes an inventory of City-owned facilities (e.g., roadways, buildings, parks and recreational facilities, vehicle maintenance, waste handling and disposal facilities).

The Permit identifies four (4) principal types of permittee-owned facilities or activities that must be addressed in the O&M Plan:

- Buildings and Facilities
- Vehicle/Equipment Storage and Maintenance Facilities
- Parks and Open Spaces
- Stormwater Infrastructure (e.g., catch basins, outfalls and treatment BMPs)

The City also developed and/or updated Stormwater Pollution Prevention Plans (SWPPPs) by July 2020 for its DPW facility and its wastewater facilities to describe specific good housekeeping and pollution prevention measures for these facilities to minimize the potential for pollutants to be exposed and conveyed by stormwater to receiving waters. These SWPPPs will be updated if any future changes are made to the facility pollution prevention practices or conditions.

The City-wide O&M plan describes best practices currently used or planned for future implementation to enhance the operations and maintenance of City facilities consistent with permit requirements. The O&M Plan includes an employee training component and a process to review and assess operations and report on progress in each future annual report.

BMP 6-1: Parks and Open Space Operations and Maintenance

Description: The O&M Plan includes written O&M procedures to minimize the use and proper storage, and disposal of pesticides, herbicides, and fertilizers (PHF) for lawn maintenance and landscaping activities and ensure practices are protective of water quality. Protective practices include use of integrated pest management (IPM), recycling or proper disposal of lawn clippings and other vegetative waste, and the use of native and drought resistant landscaping materials.

Since EPA considers downstream coastal waters to be nitrogen impaired, the City will need to:

1. Use slow-release fertilizers on City and School maintained property.
2. Properly manage grass clippings and leaf litter to limit and minimize accumulation on paved surfaces, storm drain systems and adjacent water bodies or wetlands.

Other park and recreational O&M procedures required by the Permit include

1. Management of trash containers at parks (scheduled cleanings; sufficient number), and for placing signage in areas concerning the proper disposal of pet waste.
2. Establish procedures to address waterfowl congregation areas where appropriate to reduce waterfowl droppings from entering the MS4.
3. Establish procedures to address erosion or poor vegetative cover when the permittee becomes aware of it; especially if the erosion is within 50 feet of a surface water [Part 2.3.7.1.a of the MS4 Permit].

Responsible Department: Department of Public Works/ Building and Grounds/ School Dept

BMP 6-2: Buildings and Facilities

Description: The City developed an inventory and O&M procedures to maintain the building and grounds, parking lots for municipally owned buildings including schools, police and fire stations, municipal pools, libraries, and parking garages and other facilities. The Permit requires the City to evaluate the following:

1. Use, storage, and disposal of petroleum products and other potential stormwater pollutants.
2. Provide employee training as necessary so that those responsible for handling these products know proper procedures. Ensure that Spill Prevention Plans are in place, if applicable, and coordinate with the fire department as necessary.
3. Develop management procedures for dumpsters and other waste management equipment. Sweep parking lots and keep areas surrounding the facilities clean to reduce runoff of pollutants [Part 2.3.7.1.b of the MS4 Permit].

Responsible Department: Department of Public Works and School Department

BMP 6-3: Vehicles and Equipment

Description: The O&M plan includes procedures for maintaining, fueling and washing City vehicles to minimize exposure of vehicle related fluids and fuels. Establish procedures to ensure that vehicle wash waters are not discharged to the municipal storm sewer system or to surface waters. The permit does not authorize such discharges [Part 2.3.7.1.c of the MS4 Permit].

Responsible Department: Department of Public Works

Stormwater Infrastructure Operations and Maintenance

BMP 6-4: Street/Parking Lot Sweeping

Description: The MS4 Permit requires all City owned roads and parking lots with curbs and/or catch basins be swept at least once per year in early spring following winter deicing applications. The Permit also requires close tracking and annual reporting of which streets are swept and the amount of sediment material recovered.

Nitrogen Impairment-Appendix H Requirements
Since the EPA considers waters connected to the Great Bay as impaired for nitrogen (based on the 2012 303(d) list), the City also needs to comply with Part 1 of Appendix H, which requires that City-owned streets and parking lots be **swept a minimum of twice per year** (once in the spring (following winter deicing activity) and at least once in the fall (following leaf fall). Roadways and parking lots that are closest and drain directly to tidal waters should be considered the highest priority.

The City currently sweeps streets that have curbing and/or catch basins generally twice per year from May to October. The Downtown area streets are generally swept more often. The City also utilizes a sidewalk sweeper to help reduce debris entering the stormwater system. For each future annual report, the City will continue to report the number of miles cleaned and the volume or mass of material removed.

Alternative: In lieu of post-leaf drop street sweeping in the fall, the City can implement a fall leaf litter collection program to effectively minimize the leaf litter on impervious surfaces and in stormwater drainage structures.

Reporting Requirements:
The number of miles swept, and the volume or mass of material removed shall be reported in each annual report.

Responsible Department: **Utilities Maintenance Supervisor**

BMP 6-5: Catch Basin Cleanings

Description: The MS4 permit requires the City to establish a cleaning schedule that ensures that catch basins are cleaned frequently enough that no catch basin will be more than 50% full at any time. The City will need to keep a log of catch basins cleaned and ensure proper storage of catch basin cleanings and street sweepings prior to disposal or reuse such that they do not discharge to receiving waters. The Permit also requires that a schedule be

developed to prioritize areas that are either under construction, are known to receive heavy sediment loads or a suspected to contribute a higher nutrient load due to managed turf practices and/or improper pet waste disposal.

The City maintains approximately 2,700 catch basins and drainage manholes. Catch basins are currently ranked and cleaned based on field observations and condition of the surrounding system. The City's highest priority is cleaning catch basins in the areas of North Mill Pond, Hodgson Brook, and their respective watersheds.

Catch basins are typically cleaned for one of three (3) reasons, Emergency, Routine Maintenance, and New Construction. The purpose of the cleaning will be documented by City personnel followed by the following standard operating procedures (SOPs).

- Each catch basin will be inspected for structural damage, noxious materials, sewage, or heavy flow. If any of these conditions are present, contact the Utilities Management Supervisor for further cleaning procedures.
- Cleaning is done using vacuum equipment while limiting the use of excessive wash-down waters to remove debris. Cleaning generally begins at the upstream end and working downstream of a closed drainage system.
- Complete the Catch basin cleaning/ inspection log included in Appendix E.
- All personnel engaged in catch basin cleanings should be familiar with the City's SOPs related to confined space entry procedures.

Reporting Requirements

For each Annual Report, the City will report on how many catch basins were cleaned and inspected, the total mass of material removed from all catch basins and whether any changes are planned to catch basin cleaning schedule to help ensure no sump is more than 50% full at any given time. The Permit also requires the City to document in the SWMP and in the first Annual Report its optimization plan for catch basin cleaning, inspection plans, based on current knowledge and data on sediment accumulation, or a schedule for gathering information to develop the optimization plan.

Responsible Department: Utilities Maintenance Supervisor

BMP 6-6: Stormwater Treatment BMP Inspection and Maintenance

Description: The Permit requires that the City routinely inspect and maintain its stormwater BMPs that fall under its responsibility to treat stormwater runoff from roadways and/or parking lots.

Inspectors will document observations using the City's Stormwater BMP inspection log. Inspectors will note the depth of sediment or trash accumulation, any structural damage, any unusual staining, discoloration, foams, oil sheens, noxious odors or any other indicator of potential stormwater contamination. Inspectors should also note any excessive vegetation growth or damage to existing vegetation or soils. Suggested maintenance actions will be also included. Trapped oils and grease, other observed floatable materials and water within the BMP should be removed using appropriate vacuum truck prior to removing any accumulated sediment.

BMP 6-7: Winter Road Maintenance

Description: The City DPW performs snow and ice control practices on its roadways in accordance with its own Snow and Ice Removal Plan. The City also maintains several municipal parking lots and sidewalks in critical areas and seeks to provide practical safe access to homes, businesses and municipal facilities during winter storms. poses. Road salt applications may be supplemented with liquid calcium chloride during cold temperatures below 20 degrees.

Requirements for chloride-impaired waters (Appendix H)

Because there are five streams within the City limits that are listed as chloride impaired according to the 2024 303(d) list, the City has developed and implemented a ***Salt Reduction Plan*** to improve its salt use efficiency. It's worth noting that several of the chloride impaired streams, except for Sagamore Creek, originate in areas adjacent to the Pease International Tradeport and flow through major roadway corridors associated with multilane roadways maintained by NHDOT including Routes I-95 and NH Route 16 (Spaulding Turnpike) before flowing through the main portions of the City.

As outlined in its Salt Reduction Plan, the City plans to continue to increase its use of liquid deicers to increase the effectiveness and efficiency of road salt as well as identify other practical BMPs that could be used going forward to minimize salt use.

BMP 6-8: Stormwater Pollution Prevention Plans (SWPPPs)

Description: Consistent with Section 2.3.7.2 of the Permit, the City has developed a Stormwater Pollution Prevention Plan (SWPPP) for its DPW maintenance facility associated storage areas and its Pierce Island Wastewater Facility, which are the only facilities within the MS4 that have outside storage of materials that may potentially be exposed to stormwater. The SWPPP includes a map of the facility and a description of the activities that occur at the facility. The map shall show the location of the stormwater outfalls, receiving waters, and any structural controls. Identify all activities that occur at the facility and the potential pollutants associated with each activity including the location of any floor drains.

The SWPPP includes instructions for conducting employee training and routine facility inspections and associated documentation forms. Routine quarterly SWPPP inspections have been completed since July 1, 2020, consistent with the Permit requirements.

BMP 6-9: Nitrogen Source Identification Report

Description: To address the nitrogen water quality impairment associated with the Upper and Lower sections of Sagamore Creek, the City developed a Nitrogen Source Identification Report that was completed in June 2022 consistent with Part I requirements of Appendix H. The Report will be submitted to EPA as part of the year 4 Annual Report. The report includes the following elements:

1. Calculation of total MS4 area draining to the impaired water quality segments or their tributaries, using updated mapping and catchment delineations produced pursuant to Part 2.3.4.6,
2. All screening and monitoring results pursuant to Part 2.3.4.7.d., targeting the receiving water segment(s)
3. Impervious area and DCIA for the target catchment
4. Identification, delineation and prioritization of potential catchments with high nitrogen loading
5. Identification of potential retrofit opportunities or opportunities for the installation of structural BMPs during redevelopment.

BMP 6-10: Stormwater BMP Retrofit Evaluation/Inventory

Description: Again, per Appendix H requirements for nitrogen impairments, the City will evaluate and develop an inventory of municipal property that may represent feasible locations for stormwater BMP retrofits to treat existing paved areas and reduced existing pollutant loads. The inventory and feasibility assessment will be incorporated into the Nitrogen Source Identification Report with updates on planned implementation included in the 5th year Annual Report. The City has implemented a number of structural BMPs already and will continue to seek opportunities as roadway and utility upgrades are proposed.

Annual Report Checklist

The following represents the Draft list of reporting needs and key items to be included in future Annual Reports. EPA has also indicated that they plan to release Annual Report template in the next few months for permittees to use in developing their first Annual Report. The City's Annual Report has been submitted by September 30th of each year of the permit summarizing relevant compliance activities that have been completed over the past permit year, beginning in July and ending in June of the following year.

Self-Assessment

General overview of the internal City coordination, meetings, training, staffing changes and new plan or document modifications used to comply with the permit.

BMP Selection Assessment

General description of the process for selecting and implementing BMPs (i.e., ongoing activities, collaborative efforts, new programs, staff and equipment resources).

BMPs for Meeting Total Maximum Daily Loads (TMDLs)

Description of BMPs implemented to comply with water bodies with a TMDL.

BMPs for Meeting Discharge Requirements to Impaired Waters

A description of any BMPs implemented to comply with impaired water bodies.

Summary of Minimum Control Measures

MCM1: Public Education and Outreach

Audience	Message	Distribution Method(s)	Distribution Date(s)	Evaluation Method(s)	Program Change(s)

MCM2: Public Involvement and Participation

Event / Activity	Topic	Public Notice Compliance

MCM 3: Illicit Discharge Detection and Elimination (IDDE)

- IDDE Mapping (status of completing Phase I and II mapping requirements)
- Outfall Ranking (summary of the problem, high, low and excluded outfalls)
- Status of IDDE Program Responsibilities and Systematic Procedures
- Outfall Screening and Monitoring Results
- Illicit Discharges Detected and Removed
- Employee Training

MCM 4: Construction Site Stormwater Runoff Control

Written Procedures Update		
# of Project Plans Reviewed	**# of Inspections Completed**	**# of Enforcement Actions**

MCM5: Post-Construction Stormwater Management for New Development and Redevelopment

- Ordinance/Regulation Update_____
- Street Design Assessment Status

MCM6: Operations and Maintenance (O&M) Program

- Facility and Equipment Inventory List Updates
- Facility Maintenance Activities

Catch Basins			
Total # of Catch Basins	**# Cleaned**	**# Inspected**	**Total Volume/Mass of Material Removed**

Street Sweeping	
Lane Miles Cleaned	**Volume/Mass of Material Removed**

Stormwater Pollution Prevention Plans

- Completion Status
- Site Inspection Status

Nitrogen Source Identification Report

- Status update
- Pollutant Loading Analysis
- Stormwater BMP Retrofit Evaluation

Activities Planned for Next Reporting Year

Changes to BMPs and/or Measurable Goals

- Salt Minimization Plan

Activities Undertaken by Contracted Entities

Appendices

A. NOI and EPA NPDES Authorization Letter

B. Endangered Species Act / IPaC Documentation

C. Education Outreach Materials

D. Written Illicit Discharge Detection and Elimination (IDDE) Plan

E. IDDE Inspection Results and Data

F. Operations and Maintenance (O&M) Plan

G. O&M Logs and Compliance Tracking

H. Salt Reduction Plan

I. Employee Training Records

Appendix A

NOI and EPA NPDES Authorization Letter

UNITED STATES ENVIRONMENTAL PROTECTION AGENCY
REGION 1
5 POST OFFICE SQUARE, SUITE 100
BOSTON, MA 02109-3912

VIA EMAIL

June 12, 2019

John P. Bohenko
City Manager

And;

Peter Rice
Public Works Director
680 Peverly Hill Road
Portsmouth, NH 03801
phrice@cityofportsmouth.com

Re: National Pollutant Discharge Elimination System (NPDES) Permit ID: NHR041027, City of Portsmouth, NH

Dear Peter Rice:

Your Notice of Intent (NOI) for coverage under the 2017 NPDES General Permit for Stormwater Discharges from Small Municipal Separate Storm Sewer Systems in New Hampshire (MS4 General Permit) has been reviewed by EPA and appears to be complete. You are hereby granted authorization by EPA to discharge stormwater from your MS4 in accordance with applicable terms and conditions of the MS4 General Permit, including all applicable Appendices. This authorization to discharge expires at midnight on **June 30, 2023.**

As a permittee located within the Great Bay Watershed, part 2.2.2.a of the 2017 MS4 General Permit identified your MS4 as discharging to a waterbody impaired due to total nitrogen, or tributary of a waterbody impaired due to total nitrogen. As such, discharges from your MS4 within the Great Bay Watershed are subject to the requirements of Appendix H Part I of the permit.

For those permittees that certified Endangered Species Act eligibility under Criterion C in their NOI, this authorization letter also serves as EPA's concurrence with your determination that your discharges will have no effect on the listed species present in your action area, based on the information provided in your NOI.

As a reminder, your first annual report is due by **September 30, 2019** for the reporting period from May 1, 2018 through June 30, 2019.

Information about the permit and available resources can be found on our website: https://www.epa.gov/npdes-permits/new-hampshire-small-ms4-general-permit. Should you have any questions regarding this permit please contact Suzanne Warner at warner.suzanne@epa.gov or (617) 918-1383.

Sincerely,

Thelma Murphy, Chief
NPDES Permits Branch
Water Division
United States Environmental Protection Agency, Region 1

Notice of Intent (NOI) for coverage under Small MS4 General Permit

Part I: General Conditions

General Information

Name of Municipality or Organization: City of Portsmouth State: NH

EPA NPDES Permit Number (if applicable): NHR041027

Primary MS4 Program Manager Contact Information

Name: Peter Rice Title: Public Works Director

Street Address Line 1: 680 Peverly Hill Road

Street Address Line 2:

City: Portsmouth State: NH Zip Code: 03801

Email: phrice@cityofportsmouth.com Phone Number: (603) 427-1530

Fax Number:

Other Information

Stormwater Management Program (SWMP) Location (web address or physical location, if already completed): DPW Operations Office; 680 Peverly Hill Road, Portsmouth, NH

Eligibility Determination

Endangered Species Act (ESA) Determination Complete? Yes

Eligibility Criteria (check all that apply): ☒ A ☐ B ☐ C

National Historic Preservation Act (NHPA) Determination Complete? Yes

Eligibility Criteria (check all that apply): ☐ A ☒ B ☐ C ☐ D

☑ Check the box if your municipality or organization was covered under the 2003 MS4 General Permit

MS4 Infrastructure (if covered under the 2003 permit)

Estimated Percent of Outfall Map Complete? *(Part II, III, IV or V, Subpart B.3.(a.) of 2003 permit)* 100%

If 100% of 2003 requirements not met, enter an estimated date of completion (MM/DD/YY):

Web address where MS4 map is published:

If outfall map is unavailable on the internet an electronic or paper copy of the outfall map must be included with NOI submission (see section V for submission options)

https://portsmouthnh.maps.arcgis.com/apps/webappviewer/index.html?id=6d014b3f49254a6e9c35f00a360f3e20

Regulatory Authorities (if covered under the 2003 permit)

Illicit Discharge Detection and Elimination (IDDE) Authority Adopted? *(Part II, III, IV or V, Subpart B.3.(b.) of 2003 permit)* Yes

Effective Date or Estimated Date of Adoption (MM/DD/YY): 10/15/07

Construction/Erosion and Sediment Control (ESC) Authority Adopted? *(Part II,III,IV or V, Subpart B.4.(a.) of 2003 permit)* Yes

Effective Date or Estimated Date of Adoption (MM/DD/YY): 10/15/07

Post-Construction Stormwater Management Adopted? *(Part II, III, IV or V, Subpart B.5.(a.) of 2003 permit)* Yes

Effective Date or Estimated Date of Adoption (MM/DD/YY): 10/15/07

Notice of Intent (NOI) for coverage under Small MS4 General Permit

Part II: Summary of Receiving Waters

Please list the waterbodies to which your MS4 discharges. For each waterbody, please report the number of outfalls discharging into it and, if applicable, the segment ID and any impairments.

New Hampshire list of impaired waters: http://des.nh.gov/organization/divisions/water/wmb/swqa/

.

Waterbody that receives flow from the MS4 and segment ID if applicable	Number of outfalls into receiving water segment	Chloride	Chlorophyll-a	Dissolved Oxygen/ DO Saturation	Nitrogen	Oil & Grease/ PAH	Phosphorus	Solids/ TSS/ Turbidity	E. coli	Enterococcus	Other pollutant(s) causing impairments
Upper Sagamore Creek (NHEST600031001-03)	34	☐	☐	☐	☐	☐	☐	☐	☐	☒	Acenaphthylene, Aluminum, Arsenic, Benzo(a)pyrene (PAHs), Benzo(a)anthracene, Cadmium, Chrysene (C1-C4), Copper, Dibenz(a,h)anthracene, Estuarine Bioassessments, Fluoranthene, Lead, Mercury, Nickel, Phenanthrene, Pyrene, Trans-Nonachlor, PCBs, Dioxin
Lower Sagamore Creek (NHEST600031001-04)	5	☐	☐	☐	☐	☐	☐	☐	☐	☒	Estuarine Bioassessments, PCBs, Dioxin
Lower Piscataqua River - South (NHEST600031001-02-02)	30	☐	☐	☐	☐	☐	☐	☐	☐	☒	Estuarine Bioassessments, PCBs, Dioxin
Back Channel (NHEST600031001-05)	7	☐	☐	☐	☒	☐	☐	☐	☐	☐	Estuarine Bioassessments, Light attenuation coefficient, PCBs, Dioxin
South Mill Pond (NHEST600031001-09)	13	☐	☐	☐	☐	☐	☐	☐	☐	☒	PCBs, Dioxin
North Mill Pond (NHEST600031001-10)	41	☐	☐	☐	☐	☐	☐	☐	☐	☒	PCBs, Dioxin
Unnamed Pond (NHLAK600031001-01)	2	☐	☐	☐	☐	☐	☐	☐	☐	☐	
Unnamed Brook - To Piscataqua River (NHRIV600031001-02)	10	☐	☐	☐	☐	☐	☐	☐	☐	☐	
Unnamed Brook - Sagamore Creek Dam (NHIMP600031001-01)	5	☐	☐	☐	☐	☐	☐	☐	☐	☐	Aluminum, Iron
Sagamore Creek (NHRIV600031001-03)	3	☒	☐	☐	☐	☐	☐	☐	☒	☐	pH
Lower Hodgson Brook (NHRIV600031001-04)	11	☒	☐	☒	☐	☐	☐	☐	☒	☐	Benthic-Macroinvertebrate Bioassessments (Streams), pH
Upper Hodgson Brook (NHRIV600031001-05)	1	☒	☐	☒	☐	☐	☐	☐	☒	☐	Benthic-Macroinvertebrate Bioassessments (Streams), pH, Manganese
Borthwick Ave. Tributary (NHRIV600031001-09)	7	☒	☐	☒	☐	☐	☐	☐	☒	☐	Iron, pH
Unnamed Brook to Back Channel (NHRIV600031001-21)	1	☐	☐	☐	☐	☐	☐	☐	☐	☐	
Unnamed Brook to Back Channel (NHRIV600031001-24)	2	☐	☐	☐	☐	☐	☐	☐	☐	☐	
Berrys Brook (NHRIV600031002-01)	11	☐	☐	☒	☐	☐	☐	☐	☒	☐	pH
Witch Creek (NHRIV600031002-11)	2	☐	☐	☐	☐	☐	☐	☐	☐	☐	

		☐	☐	☐	☐	☐	☐	☐	☐	☐	
Waterbody that receives flow from the MS4 and segment ID if applicable	**Number of outfalls into receiving water segment**	**Chloride**	**Chlorophyll-a**	**Dissolved Oxygen/ DO Saturation**	**Nitrogen**	**Oil & Grease/ PAH**	**Phosphorus**	**Solids/ TSS/ Turbidity**	**E. coli**	**Enterococcus**	**Other pollutant(s) causing impairments**
Haines Brook - Unnamed Brook (NHRIV600030901-04)	4	☐	☐	☐	☐	☐	☐	☐	☐	☐	
Pickering Brook (NHRIV600030904-06)	14	☒	☐	☒	☐	☐	☐	☐	☒	☐	Copper, Iron, pH
Unnamed Brook - to Unnamed Marsh (NHRIV600030904-07)	2	☐	☐	☐	☐	☐	☐	☐	☐	☐	
		☐	☐	☐	☐	☐	☐	☐	☐	☐	
		☐	☐	☐	☐	☐	☐	☐	☐	☐	
		☐	☐	☐	☐	☐	☐	☐	☐	☐	
		☐	☐	☐	☐	☐	☐	☐	☐	☐	
		☐	☐	☐	☐	☐	☐	☐	☐	☐	
		☐	☐	☐	☐	☐	☐	☐	☐	☐	
		☐	☐	☐	☐	☐	☐	☐	☐	☐	
		☐	☐	☐	☐	☐	☐	☐	☐	☐	
		☐	☐	☐	☐	☐	☐	☐	☐	☐	
		☐	☐	☐	☐	☐	☐	☐	☐	☐	
		☐	☐	☐	☐	☐	☐	☐	☐	☐	
		☐	☐	☐	☐	☐	☐	☐	☐	☐	
		☐	☐	☐	☐	☐	☐	☐	☐	☐	
		☐	☐	☐	☐	☐	☐	☐	☐	☐	

Click to lengthen table

Notice of Intent (NOI) for coverage under Small MS4 General Permit

Part III: Stormwater Management Program Summary

Identify the Best Management Practices (BMPs) that will be employed to address each of the six Minimum Control Measures (MCMs).

For each MCM, list each existing or proposed BMP by category and provide a brief description, responsible parties/departments, measurable goals, and the year the BMP will be employed (public education and outreach BMPs also requires a target audience). **Use the drop-down menus in each table or enter your own text to override the drop down menu.**

MCM 1: Public Education and Outreach

BMP Media/Category (enter your own text to override the drop down menu)	**BMP Description**	**Targeted Audience**	**Responsible Department/Parties** (enter your own text to override the drop down menu)	**Measurable Goal**	**Beginning Year of BMP Imple-mentation**
Web Page, CCTV, and Radio	Post educational materials on web site re fertilizer usage & pet waste cleanup	Residents	DPW Operations	>1,000 web visits/ viewings per year	2018
School Curricula/Programs	Information sessions regarding sustainability, pollution prevention, and BMP site visits	Residents	DPW Operations	1-2 sessions/year	2021
Displays/Posters/Kiosks	Pet waste sign and bag stations at City Parks	Residents	DPW Operations/ Parks and Recreation	Update sign message every 2 years	2020
Brochures/Pamphlets	Annual Stormwater Brochure	Residents	DPW Operations	Update newsletter annually	2019
Brochures/Pamphlets	Brochure on waste disposal, street sweeping, lawn maintenance, and irrigation	Businesses, Institutions and Commerc	DPW Operations	Update/distribute brochure every 2 years	2020
Videos	Information video on lawn maintenance, snow removal deicing, and other stormwater related topics	Businesses, Institutions and Commercial Facilities	DPW Operations/ Seacoast Stormwater Coalition	Update video every other year	2022
Brochures/Pamphlets	Fact Sheet/ checklist on Site plan review & SW mgt regulations	Developers (construction)	DPW Operations/ Planning Department	Provide checklist for applicants/ Tech Adv Comm mtgs	2019

Brochures/Pamphlets	Fact Sheet on Erosion Control Inspections/ Construction SWPPP	Developers (construction)	DPW Operations/ Planning Department	Review of all new CGP SWPPPs	2022
Brochures/Pamphlets	Lawn maintenance / water use efficiency fact sheet	Industrial Facilities	DPW Operations/ Planning Department	New fact sheet every other year	2021
Brochures/Pamphlets	Waste disposal/ pretreatment fact sheet	Industrial Facilities	DPW Operations/ Planning Department	New fact sheet every other year	2023

Notice of Intent (NOI) for coverage under Small MS4 General Permit

Part III: Stormwater Management Program Summary (continued)

MCM 2: Public Involvement and Participation

BMP Categorization	Brief BMP Description (enter your own text to override the drop down menu)	Responsible Department/Parties (enter your own text to override the drop down menu)	Additional Description/ Measurable Goal	Beginning Year of BMP Imple-mentation
Public Review	SWMP Review	DPW / City Hall	Gain input regarding stormwater management priorities measure amount of input	2019
Public Participation	Hotline/webline - reporting problems/violations	DPW / City Hall	Receive input from community and compare education and outreach with adjacent towns. Track # of meetings / input	2019
Public Participation	Catch Basin Stenciling/Markers	DPW Operations	# of stencils	2019
Public Participation	Cleanups - Roadside/General	DPW Operations	# of participants / amount of litter collected	ongoing
Public Participation	Household haz. waste/used oil collection	DPW Operations	Amount of waste collected	2/yr

Notice of Intent (NOI) for coverage under Small MS4 General Permit

Part III: Stormwater Management Program Summary (continued)

MCM 3: Illicit Discharge Detection and Elimination (IDDE)

BMP Categorization (enter your own text to override the drop down menu)	**BMP Description**	**Responsible Department/Parties** (enter your own text to override the drop down menu)	**Measurable Goal** (all text can be overwritten)
SSO inventory	Develop SSO inventory in accordance of permit conditions	DPW Operations	Complete within 1 year of effective date of permit
Storm sewer system map	Create map and update during IDDE program completion	DPW Operations	Update map within 2 years of effective date of permit and complete full system map 10 years after effective date of permit
Written IDDE program development	Create written IDDE program	DPW Operations	Complete within 1 year of the effective date of permit and update as required
Implement IDDE program	Implement catchment investigations according to program and permit conditions	DPW Operations	Complete 10 years after effective date of permit
Employee training	Train employees on IDDE implementation	DPW Operations	Train annually
Conduct dry weather screening	Conduct in accordance with outfall screening procedure and permit conditions	DPW Operations	Complete 3 years after effective date of permit
Conduct wet weather screening	Conduct in accordance with outfall screening procedure	DPW Operations	Complete 10 years after effective date of permit
Ongoing screening	Conduct dry weather and wet weather screening (as necessary)	DPW Operations	Complete ongoing outfall screening on completion of IDDE program

Notice of Intent (NOI) for coverage under Small MS4 General Permit

Part III: Stormwater Management Program Summary (continued)

MCM 4: Construction Site Stormwater Runoff Control

BMP Categorization (enter your own text to override the drop down menu or entered text)	**BMP Description**	**Responsible Department/Parties** (enter your own text to override the drop down menu)	**Measurable Goal** (all text can be overwritten)
Site inspection and enforcement of Erosion and Sediment Control (ESC) measures	Complete written procedures of site inspections and enforcement procedures	Planning/Zoning Department/City Engineer	Complete within 1 year of the effective date of permit
Site plan review	Complete written procedures of site plan review and begin implementation	Planning/Zoning Department	Complete within 1 year of the effective date of permit
Erosion and sediment control	Adoption of requirements for construction operators to implement a sediment and erosion control program	Planning/Zoning Department/City Engineer	Complete within 1 year of the effective date of permit
Waste control	Adoption of requirements to control wastes, including but not limited to, discarded building materials, concrete truck wash out, chemicals, litter, and sanitary wastes	Planning/zoning Department/City Engineer	Complete within 1 year of the effective date of permit

Notice of Intent (NOI) for coverage under Small MS4 General Permit

Part III: Stormwater Management Program Summary (continued)

MCM 5: Post-Construction Stormwater Management in New Development and Redevelopment

BMP Categorization (enter your own text to override the drop down menu or entered text)	**BMP Description**	**Responsible Department/Parties** (enter your own text to override the drop down menu)	**Measurable Goal** (all text can be overwritten)
As-built plans for on-site stormwater control	The procedures to require submission of as-built drawings and ensure long term operation and maintenance will be a part of the SWMP	Planning/zoning Department	Require submission of as-built plans for completed projects
Target properties to reduce impervious areas	Complete an inventory and priority ranking of permitee-owned property and existing infrastructure that could be retrofitted with BMPs designed to reduce the frequency, volume and pollutant loads of stormwater discharges to its MS4 through the mitigation of impervious area	Engineering /DPW Operations	Complete 4 years after effective date of permit and report annually on retrofitted properties
Allow green infrastructure	Develop a report assessing existing local regulations to determine the feasibility of making green infrastructure practices allowable when appropriate site conditions exist	Engineering / DPW operations	Complete 4 years after effective date of permit and implement recomendations of report
Street design and parking lot guidelines	Develop a report assessing requirements that affect the creation of impervious cover. The assessment will help determine if changes to design standards for streets and parking lots can be modified to support low impact design options.	Engineering / DPW Operations	Complete 4 years after effective date of permit and implement recommendations of report

Ensure any stormwater controls or management practices for new development and redevelopment meet the retention or treatment requirements of the permit and consistent with the Southeast Watershed Alliance's Model Stormwater Standards for Coastal Watershed Communities; or contain provisions that are at least as stringent as described in Section 2.3.6 of the Permit.	Adoption, amendment, or modification of a regulatory mechanism to meet permit requirements	Planning/Zoning Department/DPW Operations	Complete 2 years after effective date of permit

Notice of Intent (NOI) for coverage under Small MS4 General Permit

Part III: Stormwater Management Program Summary (continued)

MCM 6: Municipal Good Housekeeping and Pollution Prevention

BMP Categorization (enter your own text to override the drop down menu or entered text)	**BMP Description**	**Responsible Department/Parties** (enter your own text to override the drop down menu)	**Measurable Goal** (all text can be overwritten)	**Beginning Year of BMP Imple-mentation**
O&M procedures	Create written O&M procedures including all requirements contained in 2.3.7.1 for parks and open spaces, buildings and facilities, and vehicles and equipment	Parks/Recreation /DPW Operations /City Engineer	Complete and implement 2 years after effective date of permit	2020
Inventory all permittee-owned parks and open spaces, buildings and facilities, and vehicles and equipment	Create inventory	Parks/Recreation/DPW Operations	Complete 2 years after effective date of permit and implement annually	2020
Infrastructure O&M	Establish and implement program for repair and rehabilitation of MS4 infrastructure	City Engineer/ DPW Operations	Complete 2 years after effective date of permit	ongoing
Stormwater Pollution Prevention Plan (SWPPP)	Create SWPPPs for maintenance garages, transfer stations, and other waste-handling facilities	City Engineer/ DPW Operations	Complete 2 years after effective date of permit	2020
Catch basin cleaning	Establish schedule for catch basin cleaning such that each catch basin is no more than 50% full and clean catch basins on that schedule	DPW Operations	Clean catch basins on established schedule and report number of catch basins cleaned and volume of material moved annually	2018
Street sweeping program	Sweep all streets and permitee-owned parking lots in accordance with permit conditions	DPW Operations	Sweep all streets and permitee-owned parking lots once per year in the spring	2018
Road salt use optimization program	Establish and implement a program to minimize the use of road salt	DPW Operations	Implement salt use optimization during deicing season	2019

Inspections and maintenance of stormwater treatment structures	Establish and implement inspection and maintenance procedures and frequencies	City Engineer/ DPW Operations	Inspect and maintain treatment structures at least annually	2019

Notice of Intent (NOI) for coverage under Small MS4 General Permit

Part III: Stormwater Management Program Summary (continued)

Actions for Meeting Total Maximum Daily Load (TMDL) Requirements

Use the drop-down menus to select the applicable TMDL, action description to meet the TMDL requirements, and the responsible department/parties. If no options are applicable, or more than one, **enter your own text to override drop-down menus.** If submitting a NHDES approved alternative reduction plan, attach and submit it with the NOI.

Applicable TMDL	Action Description	Responsible Department/Parties (enter your own text to override the drop down menu)
Upper Sagamore Creek (NHEST600031001-03) (E. coli, Enterococcus)	Adhere to requirements in Part II.1 of Appendix F	DPW Operations / External Contractor
Lower Piscataqua River - South (NHEST600031001-02-02) (Enterococcu	Adhere to requirements in Part II.1 of Appendix F	DPW Operations / External Contractor
Lower Sagamore Creek (NHEST600031001-04) (Enterococcus)	Adhere to requirements in Part II.1 of Appendix F	DPW Operations / External Contractor
South Mill Pond (NHEST600031001-09) (Enterococcus)	Adhere to requirements in Part II.1 of Appendix F	DPW Operations / External Contractor
North Mill Pond (NHEST600031001-10) (Enterococcus)	Adhere to requirements in Part II.1 of Appendix F	DPW Operations / External Contractor
Pickering Brook (NHRIV600030904-06) (E. coli)	Adhere to requirements in Part II.1 of Appendix F	DPW Operations / External Contractor
Sagamore Creek (NHRIV600031001-03) (E. coli)	Adhere to requirements in Part II.1 of Appendix F	DPW Operations / External Contractor
Lower Hodgson Brook (NHRIV600031001-04) (E. coli)	Adhere to requirements in Part II.1 of Appendix F	DPW Operations / External Contractor
Upper Hodgson Brook (NHRIV600031001-05) (E. coli)	Adhere to requirements in Part II.1 of Appendix F	DPW Operations / External Contractor
Borthwick Ave. Tributary (NHRIV600031001-09) (E. coli)	Adhere to requirements in Part II.1 of Appendix F	DPW Operations / External Contractor
Berrys Brook (NHRIV600031002-01) (E. Coli)	Adhere to requirements in Part II.1 of Appendix F	DPW Operations / External Contractor

Notice of Intent (NOI) for coverage under Small MS4 General Permit

Part III: Stormwater Management Program Summary (continued)

Actions for Meeting Requirements Related to Water Quality Limited Waters

Use the drop-down menus to select the pollutant causing the water quality limitation and enter the waterbody ID(s) experiencing excursions above water quality standards for that pollutant. In addition, if you are subject to additional requirements due to a downstream nutrient impairment (see Part 2.2.2 of the permit) select the pollutant of concern and indicate applicable waterbody IDs or write "all waterbodies" if applicable. Choose the action description from the dropdown menu and indicate the responsible party. If no options are applicable, or more than one, **enter your own text to override drop-down menus.**

Pollutant	Waterbody ID(s)	Action Description	Responsible Department/Parties (enter your own text to override the drop down menu)
Iron	Pickering Brook (NHRIV600030904-06) Borthwick Ave. Tributary (NHRIV600031001-09)	Adhere to requirements in part V of Appendix H	DPW Operations / External Contractor
Chloride	Pickering Brook (NHRIV600030904-06) Sagamore Creek (NHRIV600031001-03) Lower Hodgson Brook (NHRIV600031001-04) Upper Hodgson Brook (NHRIV600031001-05) Borthwick Ave. Tributary (NHRIV600031001-09)	Adhere to requirements in part IV of Appendix H	DPW Operations / External Contractor
Aluminum	Upper Sagamore Creek (NHEST600031001-03)	Adhere to requirements in part V of Appendix H	DPW Operations / External Contractor
Lead	Upper Sagamore Creek (NHEST600031001-03)	Adhere to requirements in part V of Appendix H	DPW Operations / External Contractor
Cadmium	Upper Sagamore Creek (NHEST600031001-03)	Adhere to requirements in part V of Appendix H	DPW Operations / External Contractor
Copper	Upper Sagamore Creek (NHEST600031001-03) Pickering Brook (NHRIV600030904-06)	Adhere to requirements in part V of Appendix H	DPW Operations / External Contractor
Hydrocarbons (PAHs)	Upper Sagamore Creek (NHEST600031001-03)	Adhere to requirements in part V of Appendix H	DPW Operations / External Contractor

Part IV: Notes and additional information

Use the space below to indicate the part(s) of 2.2.2 that you have identified as not applicable to your MS4 and provide all supporting documentation below or attach additional documents if necessary.

Provide any additional information about your MS4 program below.

This NOI form does not include stormwater outfalls located on and under the jurisdiction of the Pease International Tradeport.

The City has actively participated in the ongoing Seacoast Stormwater Coalition collaborative meetings where various municipal and regional planning commission representatives have discussed and evaluated the 2017 NH MS4 NOI mapping needs and future compliance activities.

The water body list and associated water quality impairments included in this NOI are based on the NHDES 2016 303(d) list.

The City has several well -established and ongoing public education outreach and participation activities that will continue to be used to comply with the 2017 MS4 permit.

By submitting this Notice of Intent to Comply with the Provisions of 2017 New Hampshire Small MS4 Permit pursuant to Section 1.7.2, the City of Portsmouth does not waive any rights it has to object or contest the applicability of any provision or requirement of the Permit, including, but not limited to, any issues raised by any party in the appeal of the Permit before the United States Court of Appeals for the District of Columbia Circuit, Case Number 17-1060.

Part V: Certification

I certify under penalty of law that this document and all attachments were prepared under my direction or supervision in accordance with a system designed to assure that qualified personnel properly gathered and evaluated the information submitted. Based on my inquiry of the person or persons who manage the system, or those persons directly responsible for gathering the information, the information submitted is, to the best of my knowledge and belief, true, accurate, and complete. I have no personal knowledge that the information submitted is other than true, accurate, and complete. I am aware that there are significant penalties for submitting false information, including the possibility of fine and imprisonment for knowing violations. (40 CFR 122.22)

Name:	John P. Bohenko	Title:	City Manager
Signature:		Date:	

[To be signed according to Appendix B, Subparagraph B.11, Standard Conditions]

Note: When prompted during signing, save the document under a new file name

Appendix B

ESA & IPaC Documentation

United States Department of the Interior

FISH AND WILDLIFE SERVICE

New England Field Office
70 Commercial St, Suite 300
Concord, NH 03301-5087
http://www.fws.gov/newengland

September 24, 2018

To whom it may concern:

The U.S. Fish and Wildlife Service (USFWS) reviewed the stormwater discharge activities associated with the 2017 National Pollutant Discharge and Elimination System (NPDES) New Hampshire (NH) Small Municipal Separate Storm Sewer System (MS4) general permit (2017 NH Small MS4 General Permit) issued by the Environmental Protection Agency (EPA). We determined those activities may affect, but are not likely to adversely affect, certain species listed under the Endangered Species Act (ESA) of 1973 (87 Stat. 884, as amended; 16 U.S.C. 1531 *et seq.*) when specific conditions are met. When these conditions are met, we do not need to review individual projects. These comments are provided in accordance with section 7 of the ESA and complement existing 2017 NH Small MS4 General Permit Appendix C Guidance. We understand the applicant is acting as a non-Federal representative of the EPA for the purpose of consultation under section 7. **This letter provides additional guidance for meeting Criterion B and should be submitted as part of your application package to the EPA.**

If the USFWS Information for Planning and Consultation website (https://ecos.fws.gov/ipac/) indicates your 2017 NH Small MS4 General Permit project action area may contain one or more of the following federally listed endangered species: roseate tern (*Sterna dougallii*), dwarf wedgemussel (*Alasmidonta heterodon*), Karner blue butterfly (*Lycaeides melissa samuelis*), northeastern bulrush (*Scirpus ancistrochaetus*), or Jesup's milk-vetch (*Astragalus robbinsii var. jesupi*); threatened species: Canada lynx (*Lynx Canadensis*), piping plover (*Charadrius melodus*), or red knot (*Calidris canutus rufa*); or their federally designated critical habitat; and the specific conditions listed below are met, you may submit this letter to complete the **2017 NH Small MS4 General Permit Appendix C: Step 4** in place of a concurrence letter for informal consultation as documentation of ESA eligibility for **USFWS Criterion B**.

In addition, this letter also satisfies the requirement in the **2017 NH Small MS4 General Permit Appendix C: Step 2 (3)** to contact the USFWS and obtain a concurrence letter, if you have not yet done so. If your project action area includes one or more of the above-listed species *and* one or more of the species listed under **Criterion C,**[1] you may still use this letter to certify under

[1] Criterion C includes guidance for project action areas that may contain species for which EPA has already made a determination. These species include the northern long-eared bat (*Myotis septentrionalis*) and small whorled pogonia (*Isotria medeoloides*) (2017 NH Small MS4 General Permit Appendix C: Step 3 – Determine if You Can Meet Eligibility USFWS Criterion C).

Criterion B. All existing guidance regarding requirements for certifying eligibility according to the USFWS Criterion A, B, or C for coverage by the 2017 NH Small MS4 General Permit (see 2017 NH Small MS4 General Permit Appendix C – Endangered Species Guidance) remains unchanged.

We have determined that proposed stormwater discharge activities covered under the 2017 NH Small MS4 General Permit *may affect, but are not likely to adversely affect*, the above-listed species and the species' critical habitat when the following are true:

1. all stormwater discharges are pre-existing or previously permitted by EPA;
2. any planned operations and maintenance work covered by this permit will only affect previously disturbed areas where stormwater controls are already installed. In these situations the chance of encountering any of the subject species is discountable;
3. the project implements EPA MS4 Best Management Practices (BMPs) and meets Clean Water Act and New Hampshire Water Quality Standards. Although permitted discharges may reach the environment used by these species, BMPs reduce pollutants to the extent that discharges are not known to have measurable impacts on these species or their habitat;
4. no new construction or structural BMPs are proposed under this permit at this time; and
5. you agree that if, during the course of the permit term, you plan to install a structural BMP not identified in the Notice of Intent (NOI), you will re-initiate consultation with the USFWS as necessary (see **2017 NH Small MS4 General Permit Appendix C: Step 2 (5)**).

If the above criteria are met, further consultation with the USFWS under section 7 of the ESA is not required at this time; however, if the proposed action changes in any way such that it may affect a listed species in a manner not previously analyzed or if new information reveals the presence of additional listed species that may be affected by the project, the applicant or the EPA should contact us immediately and suspend activities that may affect those species until the appropriate level of consultation is completed with our office. Thank you for your cooperation, and please contact David Simmons of this office at (603) 227-6425 if you have questions or need further assistance.

Sincerely yours,

Thomas R Chapman
Supervisor
New England Field Office

IPaC **U.S. Fish & Wildlife Service**

IPaC resource list

This report is an automatically generated list of species and other resources such as critical habitat (collectively referred to as *trust resources*) under the U.S. Fish and Wildlife Service's (USFWS) jurisdiction that are known or expected to be on or near the project area referenced below. The list may also include trust resources that occur outside of the project area, but that could potentially be directly or indirectly affected by activities in the project area. However, determining the likelihood and extent of effects a project may have on trust resources typically requires gathering additional site-specific (e.g., vegetation/species surveys) and project-specific (e.g., magnitude and timing of proposed activities) information.

Below is a summary of the project information you provided and contact information for the USFWS office(s) with jurisdiction in the defined project area. Please read the introduction to each section that follows (Endangered Species, Migratory Birds, USFWS Facilities, and NWI Wetlands) for additional information applicable to the trust resources addressed in that section.

Location

Maine and New Hampshire

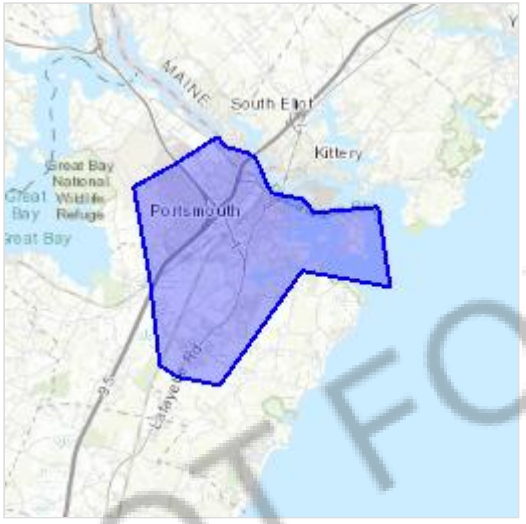

NOT FOR CONSULTATION

Local offices

Maine Ecological Services Field Office

(207) 469-7300
(207) 902-1588

MAILING ADDRESS
P. O. Box A
East Orland, ME 04431

PHYSICAL ADDRESS
306 Hatchery Road
East Orland, ME 04431

http://www.fws.gov/mainefieldoffice/index.html

New England Ecological Services Field Office

(603) 223-2541
(603) 223-0104

70 Commercial Street, Suite 300
Concord, NH 03301-5094

http://www.fws.gov/newengland

NOT FOR CONSULTATION

Endangered species

This resource list is for informational purposes only and does not constitute an analysis of project level impacts.

The primary information used to generate this list is the known or expected range of each species. Additional areas of influence (AOI) for species are also considered. An AOI includes areas outside of the species range if the species could be indirectly affected by activities in that area (e.g., placing a dam upstream of a fish population, even if that fish does not occur at the dam site, may indirectly impact the species by reducing or eliminating water flow downstream). Because species can move, and site conditions can change, the species on this list are not guaranteed to be found on or near the project area. To fully determine any potential effects to species, additional site-specific and project-specific information is often required.

Section 7 of the Endangered Species Act **requires** Federal agencies to "request of the Secretary information whether any species which is listed or proposed to be listed may be present in the area of such proposed action" for any project that is conducted, permitted, funded, or licensed by any Federal agency. A letter from the local office and a species list which fulfills this requirement can **only** be obtained by requesting an official species list from either the Regulatory Review section in IPaC (see directions below) or from the local field office directly.

For project evaluations that require USFWS concurrence/review, please return to the IPaC website and request an official species list by doing the following:

1. Draw the project location and click CONTINUE.
2. Click DEFINE PROJECT.
3. Log in (if directed to do so).
4. Provide a name and description for your project.
5. Click REQUEST SPECIES LIST.

Listed species[1] and their critical habitats are managed by the Ecological Services Program of the U.S. Fish and Wildlife Service (USFWS) and the fisheries division of the National Oceanic and Atmospheric Administration (NOAA Fisheries[2]).

Species and critical habitats under the sole responsibility of NOAA Fisheries are **not** shown on this list. Please contact NOAA Fisheries for species under their jurisdiction.

NOT FOR CONSULTATION

1. Species listed under the Endangered Species Act are threatened or endangered; IPaC also shows species that are candidates, or proposed, for listing. See the listing status page for more information.
2. NOAA Fisheries, also known as the National Marine Fisheries Service (NMFS), is an office of the National Oceanic and Atmospheric Administration within the Department of Commerce.

The following species are potentially affected by activities in this location:

Mammals

NAME	STATUS
Northern Long-eared Bat *Myotis septentrionalis* No critical habitat has been designated for this species. https://ecos.fws.gov/ecp/species/9045	Threatened

Birds

NAME	STATUS
Red Knot *Calidris canutus rufa* No critical habitat has been designated for this species. https://ecos.fws.gov/ecp/species/1864	Threatened
Roseate Tern *Sterna dougallii dougallii* No critical habitat has been designated for this species. https://ecos.fws.gov/ecp/species/2083	Endangered

Critical habitats

Potential effects to critical habitat(s) in this location must be analyzed along with the endangered species themselves.

THERE ARE NO CRITICAL HABITATS AT THIS LOCATION.

NOT FOR CONSULTATION

Migratory birds

Certain birds are protected under the Migratory Bird Treaty Act[1] and the Bald and Golden Eagle Protection Act[2].

Any person or organization who plans or conducts activities that may result in impacts to migratory birds, eagles, and their habitats should follow appropriate regulations and consider implementing appropriate conservation measures, as described below.

---

1. The Migratory Birds Treaty Act of 1918.
2. The Bald and Golden Eagle Protection Act of 1940.

Additional information can be found using the following links:

- Birds of Conservation Concern http://www.fws.gov/birds/management/managed-species/birds-of-conservation-concern.php
- Measures for avoiding and minimizing impacts to birds http://www.fws.gov/birds/management/project-assessment-tools-and-guidance/conservation-measures.php
- Nationwide conservation measures for birds http://www.fws.gov/migratorybirds/pdf/management/nationwidestandardconservationmeasures.pdf

The birds listed below are birds of particular concern either because they occur on the USFWS Birds of Conservation Concern (BCC) list or warrant special attention in your project location. To learn more about the levels of concern for birds on your list and how this list is generated, see the FAQ below. This is not a list of every bird you may find in this location, nor a guarantee that every bird on this list will be found in your project area. To see exact locations of where birders and the general public have sighted birds in and around your project area, visit the E-bird data mapping tool (Tip: enter your location, desired date range and a species on your list). For projects that occur off the Atlantic Coast, additional maps and models detailing the relative occurrence and abundance of bird species on your list are available. Links to additional information about Atlantic Coast birds, and other important information about your migratory bird list, including how to properly interpret and use your migratory bird report, can be found below.

For guidance on when to schedule activities or implement avoidance and minimization measures to reduce impacts to migratory birds on your list, click on the PROBABILITY OF PRESENCE SUMMARY at the top of your list to see when these birds are most likely to be present and breeding in your project area.

NOT FOR CONSULTATION

NAME	BREEDING SEASON (IF A BREEDING SEASON IS INDICATED FOR A BIRD ON YOUR LIST, THE BIRD MAY BREED IN YOUR PROJECT AREA SOMETIME WITHIN THE TIMEFRAME SPECIFIED, WHICH IS A VERY LIBERAL ESTIMATE OF THE DATES INSIDE WHICH THE BIRD BREEDS ACROSS ITS ENTIRE RANGE. "BREEDS ELSEWHERE" INDICATES THAT THE BIRD DOES NOT LIKELY BREED IN YOUR PROJECT AREA.)
American Oystercatcher Haematopus palliatus This is a Bird of Conservation Concern (BCC) throughout its range in the continental USA and Alaska. https://ecos.fws.gov/ecp/species/8935	Breeds Apr 15 to Aug 31
Arctic Tern Sterna paradisaea This is not a Bird of Conservation Concern (BCC) in this area, but warrants attention because of the Eagle Act or for potential susceptibilities in offshore areas from certain types of development or activities.	Breeds May 20 to Aug 15
Atlantic Puffin Fratercula arctica This is not a Bird of Conservation Concern (BCC) in this area, but warrants attention because of the Eagle Act or for potential susceptibilities in offshore areas from certain types of development or activities. https://ecos.fws.gov/ecp/species/8943	Breeds Apr 15 to Aug 15
Bald Eagle Haliaeetus leucocephalus This is not a Bird of Conservation Concern (BCC) in this area, but warrants attention because of the Eagle Act or for potential susceptibilities in offshore areas from certain types of development or activities. https://ecos.fws.gov/ecp/species/1626	Breeds Oct 15 to Aug 31

NOT FOR CONSULTATION

Black Guillemot Cepphus grylle — Breeds May 15 to Sep 10

This is not a Bird of Conservation Concern (BCC) in this area, but warrants attention because of the Eagle Act or for potential susceptibilities in offshore areas from certain types of development or activities.

Black Scoter Melanitta nigra — Breeds elsewhere

This is not a Bird of Conservation Concern (BCC) in this area, but warrants attention because of the Eagle Act or for potential susceptibilities in offshore areas from certain types of development or activities.

Black-billed Cuckoo Coccyzus erythropthalmus — Breeds May 15 to Oct 10

This is a Bird of Conservation Concern (BCC) throughout its range in the continental USA and Alaska.
https://ecos.fws.gov/ecp/species/9399

Black-legged Kittiwake Rissa tridactyla — Breeds elsewhere

This is not a Bird of Conservation Concern (BCC) in this area, but warrants attention because of the Eagle Act or for potential susceptibilities in offshore areas from certain types of development or activities.

Bobolink Dolichonyx oryzivorus — Breeds May 20 to Jul 31

This is a Bird of Conservation Concern (BCC) throughout its range in the continental USA and Alaska.

Bonaparte's Gull Chroicocephalus philadelphia — Breeds elsewhere

This is not a Bird of Conservation Concern (BCC) in this area, but warrants attention because of the Eagle Act or for potential susceptibilities in offshore areas from certain types of development or activities.

Buff-breasted Sandpiper Calidris subruficollis — Breeds elsewhere

This is a Bird of Conservation Concern (BCC) throughout its range in the continental USA and Alaska.
https://ecos.fws.gov/ecp/species/9488

NOT FOR CONSULTATION

Canada Warbler Cardellina canadensis — Breeds May 20 to Aug 10

This is a Bird of Conservation Concern (BCC) throughout its range in the continental USA and Alaska.

Clapper Rail Rallus crepitans — Breeds Apr 10 to Oct 31

This is a Bird of Conservation Concern (BCC) only in particular Bird Conservation Regions (BCRs) in the continental USA

Common Eider Somateria mollissima — Breeds Jun 1 to Sep 30

This is not a Bird of Conservation Concern (BCC) in this area, but warrants attention because of the Eagle Act or for potential susceptibilities in offshore areas from certain types of development or activities.

Common Loon gavia immer — Breeds Apr 15 to Oct 31

This is not a Bird of Conservation Concern (BCC) in this area, but warrants attention because of the Eagle Act or for potential susceptibilities in offshore areas from certain types of development or activities.
https://ecos.fws.gov/ecp/species/4464

Common Murre Uria aalge — Breeds Apr 15 to Aug 15

This is not a Bird of Conservation Concern (BCC) in this area, but warrants attention because of the Eagle Act or for potential susceptibilities in offshore areas from certain types of development or activities.

Common Tern Sterna hirundo — Breeds May 10 to Sep 10

This is not a Bird of Conservation Concern (BCC) in this area, but warrants attention because of the Eagle Act or for potential susceptibilities in offshore areas from certain types of development or activities.
https://ecos.fws.gov/ecp/species/4963

NOT FOR CONSULTATION

Cory's Shearwater Calonectris diomedea — Breeds elsewhere

This is not a Bird of Conservation Concern (BCC) in this area, but warrants attention because of the Eagle Act or for potential susceptibilities in offshore areas from certain types of development or activities.

Double-crested Cormorant phalacrocorax auritus — Breeds Apr 20 to Aug 31

This is not a Bird of Conservation Concern (BCC) in this area, but warrants attention because of the Eagle Act or for potential susceptibilities in offshore areas from certain types of development or activities.
https://ecos.fws.gov/ecp/species/3478

Dovekie Alle alle — Breeds elsewhere

This is not a Bird of Conservation Concern (BCC) in this area, but warrants attention because of the Eagle Act or for potential susceptibilities in offshore areas from certain types of development or activities.
https://ecos.fws.gov/ecp/species/6041

Dunlin Calidris alpina arcticola — Breeds elsewhere

This is a Bird of Conservation Concern (BCC) only in particular Bird Conservation Regions (BCRs) in the continental USA

Eastern Whip-poor-will Antrostomus vociferus — Breeds May 1 to Aug 20

This is a Bird of Conservation Concern (BCC) throughout its range in the continental USA and Alaska.

Evening Grosbeak Coccothraustes vespertinus — Breeds elsewhere

This is a Bird of Conservation Concern (BCC) throughout its range in the continental USA and Alaska.

Great Black-backed Gull Larus marinus — Breeds Apr 15 to Aug 20

This is not a Bird of Conservation Concern (BCC) in this area, but warrants attention because of the Eagle Act or for potential susceptibilities in offshore areas from certain types of development or activities.

NOT FOR CONSULTATION

Great Shearwater Puffinus gravis This is not a Bird of Conservation Concern (BCC) in this area, but warrants attention because of the Eagle Act or for potential susceptibilities in offshore areas from certain types of development or activities.	Breeds elsewhere
Herring Gull Larus argentatus This is not a Bird of Conservation Concern (BCC) in this area, but warrants attention because of the Eagle Act or for potential susceptibilities in offshore areas from certain types of development or activities.	Breeds Apr 20 to Aug 31
Hudsonian Godwit Limosa haemastica This is a Bird of Conservation Concern (BCC) throughout its range in the continental USA and Alaska.	Breeds elsewhere
Kentucky Warbler Oporornis formosus This is a Bird of Conservation Concern (BCC) throughout its range in the continental USA and Alaska.	Breeds Apr 20 to Aug 20
Leach's Storm-petrel Oceanodroma leucorhoa This is not a Bird of Conservation Concern (BCC) in this area, but warrants attention because of the Eagle Act or for potential susceptibilities in offshore areas from certain types of development or activities.	Breeds May 15 to Nov 20
Least Tern Sterna antillarum This is a Bird of Conservation Concern (BCC) only in particular Bird Conservation Regions (BCRs) in the continental USA	Breeds Apr 20 to Sep 10
Lesser Yellowlegs Tringa flavipes This is a Bird of Conservation Concern (BCC) throughout its range in the continental USA and Alaska. https://ecos.fws.gov/ecp/species/9679	Breeds elsewhere

NOT FOR CONSULTATION

Long-tailed Duck Clangula hyemalis — Breeds elsewhere

This is not a Bird of Conservation Concern (BCC) in this area, but warrants attention because of the Eagle Act or for potential susceptibilities in offshore areas from certain types of development or activities.
https://ecos.fws.gov/ecp/species/7238

Manx Shearwater Puffinus puffinus — Breeds Apr 15 to Oct 31

This is not a Bird of Conservation Concern (BCC) in this area, but warrants attention because of the Eagle Act or for potential susceptibilities in offshore areas from certain types of development or activities.

Nelson's Sparrow Ammodramus nelsoni — Breeds May 15 to Sep 5

This is a Bird of Conservation Concern (BCC) throughout its range in the continental USA and Alaska.

Northern Gannet Morus bassanus — Breeds elsewhere

This is not a Bird of Conservation Concern (BCC) in this area, but warrants attention because of the Eagle Act or for potential susceptibilities in offshore areas from certain types of development or activities.

Parasitic Jaeger Stercorarius parasiticus — Breeds elsewhere

This is not a Bird of Conservation Concern (BCC) in this area, but warrants attention because of the Eagle Act or for potential susceptibilities in offshore areas from certain types of development or activities.

Prairie Warbler Dendroica discolor — Breeds May 1 to Jul 31

This is a Bird of Conservation Concern (BCC) throughout its range in the continental USA and Alaska.

Purple Sandpiper Calidris maritima — Breeds elsewhere

This is a Bird of Conservation Concern (BCC) throughout its range in the continental USA and Alaska.

NOT FOR CONSULTATION

Razorbill Alca torda — Breeds Jun 15 to Sep 10

This is not a Bird of Conservation Concern (BCC) in this area, but warrants attention because of the Eagle Act or for potential susceptibilities in offshore areas from certain types of development or activities.

Red-breasted Merganser Mergus serrator — Breeds elsewhere

This is not a Bird of Conservation Concern (BCC) in this area, but warrants attention because of the Eagle Act or for potential susceptibilities in offshore areas from certain types of development or activities.

Red-necked Phalarope Phalaropus lobatus — Breeds elsewhere

This is not a Bird of Conservation Concern (BCC) in this area, but warrants attention because of the Eagle Act or for potential susceptibilities in offshore areas from certain types of development or activities.

Red-throated Loon Gavia stellata — Breeds elsewhere

This is a Bird of Conservation Concern (BCC) throughout its range in the continental USA and Alaska.

Ring-billed Gull Larus delawarensis — Breeds elsewhere

This is not a Bird of Conservation Concern (BCC) in this area, but warrants attention because of the Eagle Act or for potential susceptibilities in offshore areas from certain types of development or activities.

Roseate Tern Sterna dougallii — Breeds May 10 to Aug 31

This is not a Bird of Conservation Concern (BCC) in this area, but warrants attention because of the Eagle Act or for potential susceptibilities in offshore areas from certain types of development or activities.

Royal Tern Thalasseus maximus — Breeds Apr 15 to Aug 31

This is not a Bird of Conservation Concern (BCC) in this area, but warrants attention because of the Eagle Act or for potential susceptibilities in offshore areas from certain types of development or activities.

NOT FOR CONSULTATION

Ruddy Turnstone *Arenaria interpres morinella* This is a Bird of Conservation Concern (BCC) only in particular Bird Conservation Regions (BCRs) in the continental USA	Breeds elsewhere
Rusty Blackbird *Euphagus carolinus* This is a Bird of Conservation Concern (BCC) throughout its range in the continental USA and Alaska.	Breeds elsewhere
Saltmarsh Sparrow *Ammodramus caudacutus* This is a Bird of Conservation Concern (BCC) throughout its range in the continental USA and Alaska.	Breeds May 15 to Sep 5
Semipalmated Sandpiper *Calidris pusilla* This is a Bird of Conservation Concern (BCC) throughout its range in the continental USA and Alaska.	Breeds elsewhere
Short-billed Dowitcher *Limnodromus griseus* This is a Bird of Conservation Concern (BCC) throughout its range in the continental USA and Alaska. https://ecos.fws.gov/ecp/species/9480	Breeds elsewhere
Snowy Owl *Bubo scandiacus* This is a Bird of Conservation Concern (BCC) throughout its range in the continental USA and Alaska.	Breeds elsewhere
Surf Scoter *Melanitta perspicillata* This is not a Bird of Conservation Concern (BCC) in this area, but warrants attention because of the Eagle Act or for potential susceptibilities in offshore areas from certain types of development or activities.	Breeds elsewhere

NOT FOR CONSULTATION

Thick-billed Murre Uria lomvia — Breeds Apr 15 to Aug 15

This is not a Bird of Conservation Concern (BCC) in this area, but warrants attention because of the Eagle Act or for potential susceptibilities in offshore areas from certain types of development or activities.

Whimbrel Numenius phaeopus — Breeds elsewhere

This is a Bird of Conservation Concern (BCC) throughout its range in the continental USA and Alaska.
https://ecos.fws.gov/ecp/species/9483

White-winged Scoter Melanitta fusca — Breeds elsewhere

This is not a Bird of Conservation Concern (BCC) in this area, but warrants attention because of the Eagle Act or for potential susceptibilities in offshore areas from certain types of development or activities.

Willet Tringa semipalmata — Breeds Apr 20 to Aug 5

This is a Bird of Conservation Concern (BCC) throughout its range in the continental USA and Alaska.

Wilson's Storm-petrel Oceanites oceanicus — Breeds elsewhere

This is not a Bird of Conservation Concern (BCC) in this area, but warrants attention because of the Eagle Act or for potential susceptibilities in offshore areas from certain types of development or activities.

Wood Thrush Hylocichla mustelina — Breeds May 10 to Aug 31

This is a Bird of Conservation Concern (BCC) throughout its range in the continental USA and Alaska.

Probability of Presence Summary

The graphs below provide our best understanding of when birds of concern are most likely to be present in your project area. This information can be used to tailor and schedule your project activities to avoid or minimize impacts to birds. Please make sure you read and understand the FAQ “Proper Interpretation and Use of Your Migratory Bird Report” before using or

NOT FOR CONSULTATION

attempting to interpret this report.

Probability of Presence (■)

Each green bar represents the bird's relative probability of presence in the 10km grid cell(s) your project overlaps during a particular week of the year. (A year is represented as 12 4-week months.) A taller bar indicates a higher probability of species presence. The survey effort (see below) can be used to establish a level of confidence in the presence score. One can have higher confidence in the presence score if the corresponding survey effort is also high.

How is the probability of presence score calculated? The calculation is done in three steps:

1. The probability of presence for each week is calculated as the number of survey events in the week where the species was detected divided by the total number of survey events for that week. For example, if in week 12 there were 20 survey events and the Spotted Towhee was found in 5 of them, the probability of presence of the Spotted Towhee in week 12 is 0.25.
2. To properly present the pattern of presence across the year, the relative probability of presence is calculated. This is the probability of presence divided by the maximum probability of presence across all weeks. For example, imagine the probability of presence in week 20 for the Spotted Towhee is 0.05, and that the probability of presence at week 12 (0.25) is the maximum of any week of the year. The relative probability of presence on week 12 is 0.25/0.25 = 1; at week 20 it is 0.05/0.25 = 0.2.
3. The relative probability of presence calculated in the previous step undergoes a statistical conversion so that all possible values fall between 0 and 10, inclusive. This is the probability of presence score.

To see a bar's probability of presence score, simply hover your mouse cursor over the bar.

Breeding Season (■)
Yellow bars denote a very liberal estimate of the time-frame inside which the bird breeds across its entire range. If there are no yellow bars shown for a bird, it does not breed in your project area.

Survey Effort (|)
Vertical black lines superimposed on probability of presence bars indicate the number of surveys performed for that species in the 10km grid cell(s) your project area overlaps. The number of surveys is expressed as a range, for example, 33 to 64 surveys.

To see a bar's survey effort range, simply hover your mouse cursor over the bar.

No Data (–)
A week is marked as having no data if there were no survey events for that week.

NOT FOR CONSULTATION

Survey Timeframe

Surveys from only the last 10 years are used in order to ensure delivery of currently relevant information. The exception to this is areas off the Atlantic coast, where bird returns are based on all years of available data, since data in these areas is currently much more sparse.

NOT FOR CONSULTATION

Bald Eagle
Non-BCC Vulnerable (This is not a Bird of Conservation Concern (BCC) in this area, but warrants attention because of the Eagle Act or for potential susceptibilities in offshore areas from certain types of development or activities.)

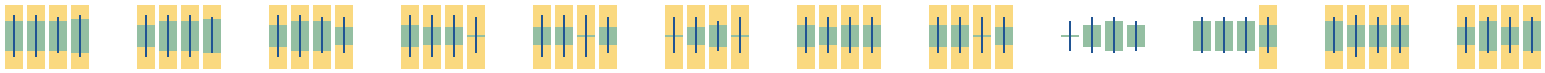

Black Guillemot
Non-BCC Vulnerable (This is not a Bird of Conservation Concern (BCC) in this area, but warrants attention because of the Eagle Act or for potential susceptibilities in offshore areas from certain types of development or activities.)

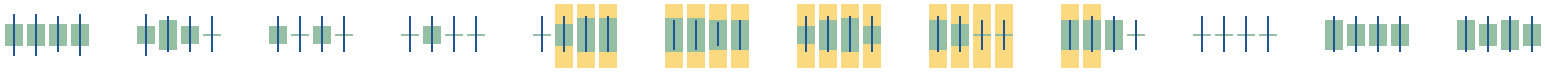

Black Scoter
Non-BCC Vulnerable (This is not a Bird of Conservation Concern (BCC) in this area, but warrants attention because of the Eagle Act or for potential susceptibilities in offshore areas from certain types of development or activities.)

Black-billed Cuckoo
BCC Rangewide (CON) (This is a Bird of Conservation Concern (BCC) throughout its range in the continental USA and Alaska.)

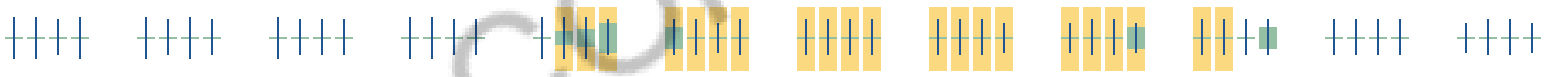

NOT FOR CONSULTATION

Black-legged Kittiwake
Non-BCC Vulnerable (This is not a Bird of Conservation Concern (BCC) in this area, but warrants attention because of the Eagle Act or for potential susceptibilities in offshore areas from certain types of development or activities.)

Bobolink
BCC Rangewide (CON) (This is a Bird of Conservation Concern (BCC) throughout its range in the continental USA and Alaska.)

Bonaparte's Gull
Non-BCC Vulnerable (This is not a Bird of Conservation Concern (BCC) in this area, but warrants attention because of the Eagle Act or for potential susceptibilities in offshore areas from certain types of development or activities.)

Buff-breasted Sandpiper
BCC Rangewide (CON) (This is a Bird of Conservation Concern (BCC) throughout its range in the continental USA and Alaska.)

Canada Warbler
BCC Rangewide (CON) (This is a Bird of Conservation Concern (BCC) throughout its range in the continental USA and Alaska.)

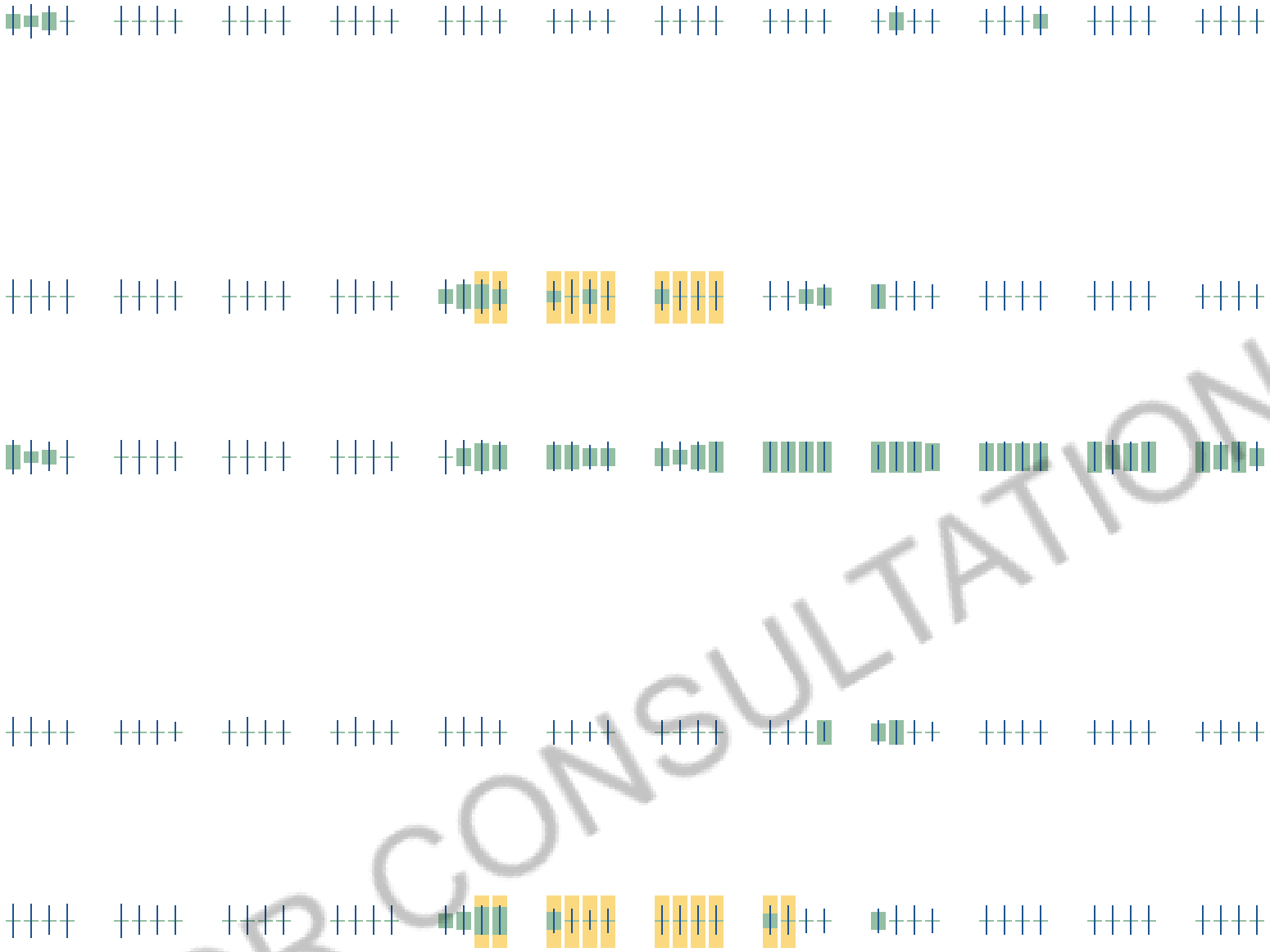

NOT FOR CONSULTATION

Clapper Rail
BCC - BCR (This is a Bird of Conservation Concern (BCC) only in particular Bird Conservation Regions (BCRs) in the continental USA)

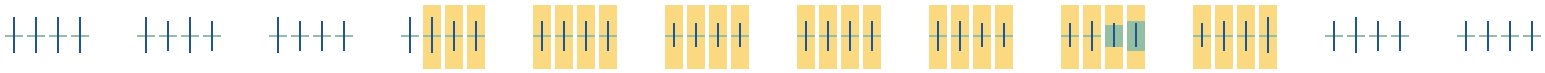

Common Eider
Non-BCC Vulnerable (This is not a Bird of Conservation Concern (BCC) in this area, but warrants attention because of the Eagle Act or for potential susceptibilities in offshore areas from certain types of development or activities.)

Common Loon
Non-BCC Vulnerable (This is not a Bird of Conservation Concern (BCC) in this area, but warrants attention because of the Eagle Act or for potential susceptibilities in offshore areas from certain types of development or activities.)

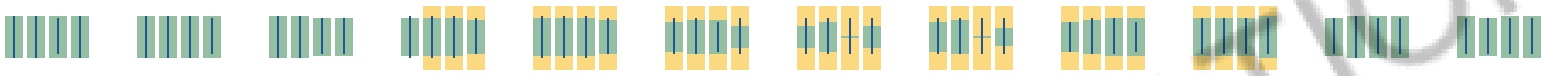

Common Murre
Non-BCC Vulnerable (This is not a Bird of Conservation Concern (BCC) in this area, but warrants attention because of the Eagle Act or for potential susceptibilities in offshore areas from certain types of development or activities.)

NOT FOR CONSULTATION

Common Tern
Non-BCC Vulnerable (This is not a Bird of Conservation Concern (BCC) in this area, but warrants attention because of the Eagle Act or for potential susceptibilities in offshore areas from certain types of development or activities.)

Cory's Shearwater
Non-BCC Vulnerable (This is not a Bird of Conservation Concern (BCC) in this area, but warrants attention because of the Eagle Act or for potential susceptibilities in offshore areas from certain types of development or activities.)

Double-crested Cormorant
Non-BCC Vulnerable (This is not a Bird of Conservation Concern (BCC) in this area, but warrants attention because of the Eagle Act or for potential susceptibilities in offshore areas from certain types of development or activities.)

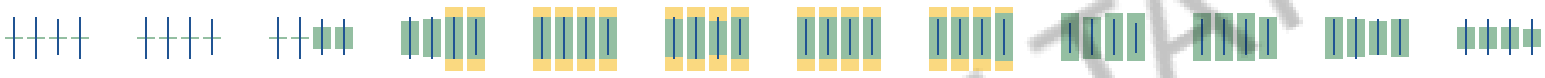

Dovekie
Non-BCC Vulnerable (This is not a Bird of Conservation Concern (BCC) in this area, but warrants attention because of the Eagle Act or for potential susceptibilities in offshore areas from certain types of development or activities.)

NOT FOR CONSULTATION

Dunlin
BCC - BCR (This is a Bird of Conservation Concern (BCC) only in particular Bird Conservation Regions (BCRs) in the continental USA)

Eastern Whip-poor-will
BCC Rangewide (CON) (This is a Bird of Conservation Concern (BCC) throughout its range in the continental USA and Alaska.)

Evening Grosbeak
BCC Rangewide (CON) (This is a Bird of Conservation Concern (BCC) throughout its range in the continental USA and Alaska.)

Great Black-backed Gull
Non-BCC Vulnerable (This is not a Bird of Conservation Concern (BCC) in this area, but warrants attention because of the Eagle Act or for potential susceptibilities in offshore areas from certain types of development or activities.)

SPECIES	JAN	FEB	MAR	APR	MAY	JUN	JUL	AUG	SEP	OCT	NOV	DEC
Great Shearwater Non-BCC Vulnerable (This is not a Bird of Conservation Concern (BCC) in this area, but warrants attention because of the Eagle Act or for potential susceptibilities in offshore areas from certain types of development or activities.)												

NOT FOR CONSULTATION

Herring Gull
Non-BCC Vulnerable (This is not a Bird of Conservation Concern (BCC) in this area, but warrants attention because of the Eagle Act or for potential susceptibilities in offshore areas from certain types of development or activities.)

Hudsonian Godwit
BCC Rangewide (CON) (This is a Bird of Conservation Concern (BCC) throughout its range in the continental USA and Alaska.)

Kentucky Warbler
BCC Rangewide (CON) (This is a Bird of Conservation Concern (BCC) throughout its range in the continental USA and Alaska.)

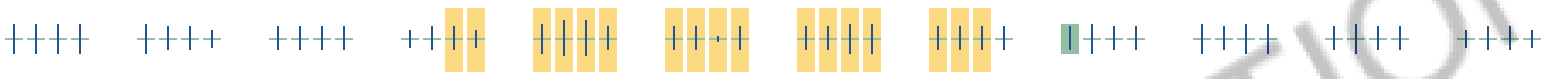

Leach's Storm-petrel
Non-BCC Vulnerable (This is not a Bird of Conservation Concern (BCC) in this area, but warrants attention because of the Eagle Act or for potential susceptibilities in offshore areas from certain types of development or activities.)

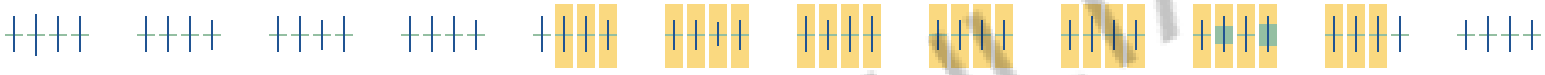

Least Tern
BCC - BCR (This is a Bird of Conservation Concern (BCC) only in particular Bird Conservation Regions (BCRs) in the continental USA)

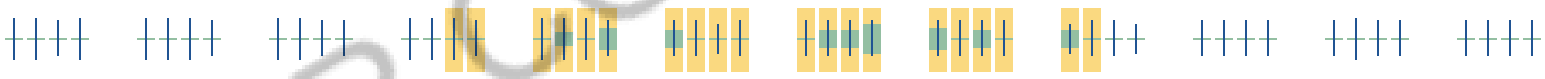

NOT FOR CONSULTATION

Lesser Yellowlegs
BCC Rangewide (CON) (This is a Bird of Conservation Concern (BCC) throughout its range in the continental USA and Alaska.)

Long-tailed Duck
Non-BCC Vulnerable (This is not a Bird of Conservation Concern (BCC) in this area, but warrants attention because of the Eagle Act or for potential susceptibilities in offshore areas from certain types of development or activities.)

Manx Shearwater
Non-BCC Vulnerable (This is not a Bird of Conservation Concern (BCC) in this area, but warrants attention because of the Eagle Act or for potential susceptibilities in offshore areas from certain types of development or activities.)

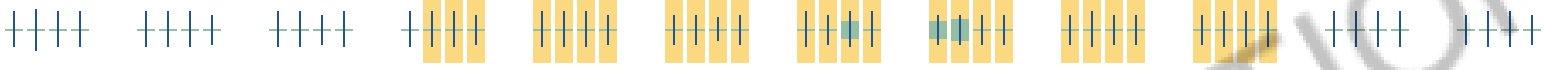

Nelson's Sparrow
BCC Rangewide (CON) (This is a Bird of Conservation Concern (BCC) throughout its range in the continental USA and Alaska.)

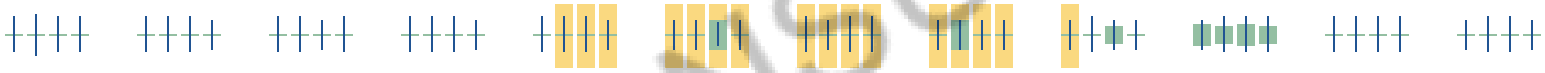

Northern Gannet
Non-BCC Vulnerable (This is not a Bird of Conservation Concern (BCC) in this area, but warrants attention because of the Eagle Act or for potential susceptibilities in offshore areas from certain types of development or activities.)

NOT FOR CONSULTATION

Parasitic Jaeger
Non-BCC Vulnerable (This is not a Bird of Conservation Concern (BCC) in this area, but warrants attention because of the Eagle Act or for potential susceptibilities in offshore areas from certain types of development or activities.)

SPECIES	JAN	FEB	MAR	APR	MAY	JUN	JUL	AUG	SEP	OCT	NOV	DEC
Prairie Warbler BCC Rangewide (CON) (This is a Bird of Conservation Concern (BCC) throughout its range in the continental USA and Alaska.)												
Purple Sandpiper BCC Rangewide (CON) (This is a Bird of Conservation Concern (BCC) throughout its range in the continental USA and Alaska.)												
Razorbill Non-BCC Vulnerable (This is not a Bird of Conservation Concern (BCC) in this area, but warrants attention because of the Eagle Act or for potential susceptibilities in offshore areas from certain types of development or activities.)												

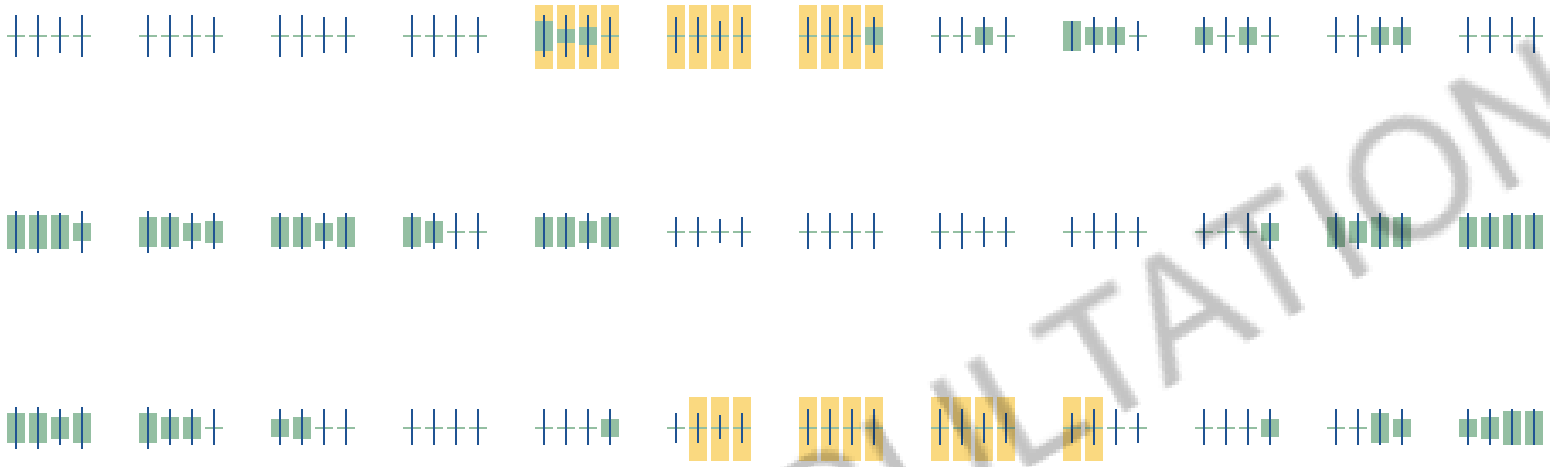

NOT FOR CONSULTATION

Red-breasted Merganser
Non-BCC Vulnerable (This is not a Bird of Conservation Concern (BCC) in this area, but warrants attention because of the Eagle Act or for potential susceptibilities in offshore areas from certain types of development or activities.)

Red-necked Phalarope
Non-BCC Vulnerable (This is not a Bird of Conservation Concern (BCC) in this area, but warrants attention because of the Eagle Act or for potential susceptibilities in offshore areas from certain types of development or activities.)

Red-throated Loon
BCC Rangewide (CON) (This is a Bird of Conservation Concern (BCC) throughout its range in the continental USA and Alaska.)

Ring-billed Gull
Non-BCC Vulnerable (This is not a Bird of Conservation Concern (BCC) in this area, but warrants attention because of the Eagle Act or for potential susceptibilities in offshore areas from certain types of development or activities.)

NOT FOR CONSULTATION

Roseate Tern
Non-BCC Vulnerable (This is not a Bird of Conservation Concern (BCC) in this area, but warrants attention because of the Eagle Act or for potential susceptibilities in offshore areas from certain types of development or activities.)

Royal Tern
Non-BCC Vulnerable (This is not a Bird of Conservation Concern (BCC) in this area, but warrants attention because of the Eagle Act or for potential susceptibilities in offshore areas from certain types of development or activities.)

Ruddy Turnstone
BCC - BCR (This is a Bird of Conservation Concern (BCC) only in particular Bird Conservation Regions (BCRs) in the continental USA)

Rusty Blackbird
BCC Rangewide (CON) (This is a Bird of Conservation Concern (BCC) throughout its range in the continental USA and Alaska.)

Saltmarsh Sparrow
BCC Rangewide (CON) (This is a Bird of Conservation Concern (BCC) throughout its range in the continental USA and Alaska.)

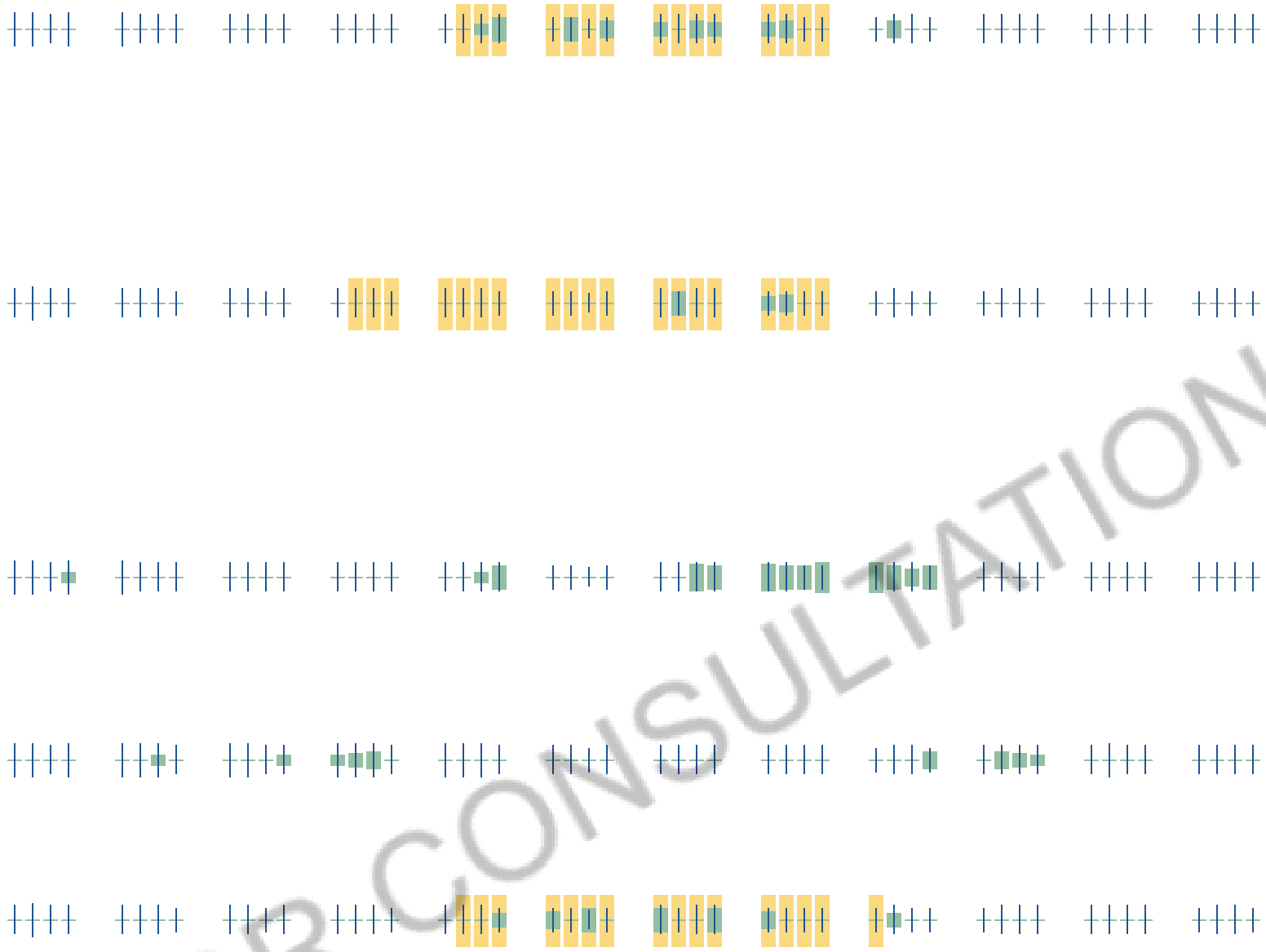

NOT FOR CONSULTATION

Semipalmated Sandpiper
BCC Rangewide (CON) (This is a Bird of Conservation Concern (BCC) throughout its range in the continental USA and Alaska.)

Short-billed Dowitcher
BCC Rangewide (CON) (This is a Bird of Conservation Concern (BCC) throughout its range in the continental USA and Alaska.)

Snowy Owl
BCC Rangewide (CON) (This is a Bird of Conservation Concern (BCC) throughout its range in the continental USA and Alaska.)

Surf Scoter
Non-BCC Vulnerable (This is not a Bird of Conservation Concern (BCC) in this area, but warrants attention because of the Eagle Act or for potential susceptibilities in offshore areas from certain types of development or activities.)

Thick-billed Murre
Non-BCC Vulnerable (This is not a Bird of Conservation Concern (BCC) in this area, but warrants attention because of the Eagle Act or for potential susceptibilities in offshore areas from certain types of development or activities.)

NOT FOR CONSULTATION

Whimbrel
BCC Rangewide (CON) (This is a Bird of Conservation Concern (BCC) throughout its range in the continental USA and Alaska.)

White-winged Scoter
Non-BCC Vulnerable (This is not a Bird of Conservation Concern (BCC) in this area, but warrants attention because of the Eagle Act or for potential susceptibilities in offshore areas from certain types of development or activities.)

Willet
BCC Rangewide (CON) (This is a Bird of Conservation Concern (BCC) throughout its range in the continental USA and Alaska.)

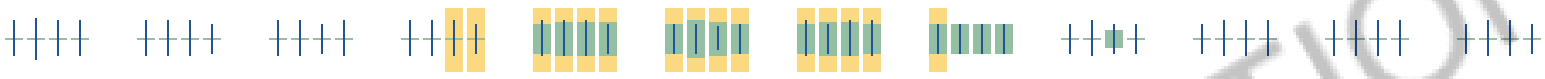

Wilson's Storm-petrel
Non-BCC Vulnerable (This is not a Bird of Conservation Concern (BCC) in this area, but warrants attention because of the Eagle Act or for potential susceptibilities in offshore areas from certain types of development or activities.)

Wood Thrush
BCC Rangewide (CON) (This is a Bird of Conservation Concern (BCC) throughout its range in the continental USA and Alaska.)

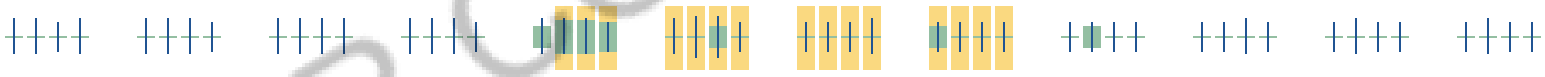

NOT FOR CONSULTATION

Tell me more about conservation measures I can implement to avoid or minimize impacts to migratory birds.

Nationwide Conservation Measures describes measures that can help avoid and minimize impacts to all birds at any location year round. Implementation of these measures is particularly important when birds are most likely to occur in the project area. When birds may be breeding in the area, identifying the locations of any active nests and avoiding their destruction is a very helpful impact minimization measure.

To see when birds are most likely to occur and be breeding in your project area, view the Probability of Presence Summary. Additional measures and/or permits may be advisable depending on the type of activity you are conducting and the type of infrastructure or bird species present on your project site.

What does IPaC use to generate the migratory birds potentially occurring in my specified location?

The Migratory Bird Resource List is comprised of USFWS Birds of Conservation Concern (BCC) and other species that may warrant special attention in your project location.

The migratory bird list generated for your project is derived from data provided by the Avian Knowledge Network (AKN). The AKN data is based on a growing collection of survey, banding, and citizen science datasets and is queried and filtered to return a list of those birds reported as occurring in the 10km grid cell(s) which your project intersects, and that have been identified as warranting special attention because they are a BCC species in that area, an eagle (Eagle Act requirements may apply), or a species that has a particular vulnerability to offshore activities or development.

Again, the Migratory Bird Resource list includes only a subset of birds that may occur in your project area. It is not representative of all birds that may occur in your project area. To get a list of all birds potentially present in your project area, please visit the E-bird Explore Data Tool.

What does IPaC use to generate the probability of presence graphs for the migratory birds potentially occurring in my specified location?

The probability of presence graphs associated with your migratory bird list are based on data provided by the Avian Knowledge Network (AKN). This data is derived from a growing collection of survey, banding, and citizen science datasets .

Probability of presence data is continuously being updated as new and better information becomes available. To learn more about how the probability of presence graphs are produced and how to interpret them, go the Probability of Presence Summary and then click on the "Tell me about these graphs" link.

How do I know if a bird is breeding, wintering, migrating or present year-round in my project area?

To see what part of a particular bird's range your project area falls within (i.e. breeding, wintering, migrating or year-round), you may refer to the following resources: The Cornell Lab of Ornithology All About Birds Bird Guide, or (if you are unsuccessful in locating the bird of interest there), the Cornell Lab of Ornithology Neotropical Birds guide. If a bird on your migratory bird species list has a breeding season associated with it, if that bird does occur in your project area, there may be nests present at some point within the timeframe specified. If "Breeds elsewhere" is indicated, then the bird likely does not breed in your project area.

What are the levels of concern for migratory birds?

Migratory birds delivered through IPaC fall into the following distinct categories of concern:

NOT FOR CONSULTATION

1. "BCC Rangewide" birds are Birds of Conservation Concern (BCC) that are of concern throughout their range anywhere within the USA (including Hawaii, the Pacific Islands, Puerto Rico, and the Virgin Islands);
2. "BCC - BCR" birds are BCCs that are of concern only in particular Bird Conservation Regions (BCRs) in the continental USA; and
3. "Non-BCC - Vulnerable" birds are not BCC species in your project area, but appear on your list either because of the Eagle Act requirements (for eagles) or (for non-eagles) potential susceptibilities in offshore areas from certain types of development or activities (e.g. offshore energy development or longline fishing).

Although it is important to try to avoid and minimize impacts to all birds, efforts should be made, in particular, to avoid and minimize impacts to the birds on this list, especially eagles and BCC species of rangewide concern. For more information on conservation measures you can implement to help avoid and minimize migratory bird impacts and requirements for eagles, please see the FAQs for these topics.

Details about birds that are potentially affected by offshore projects

For additional details about the relative occurrence and abundance of both individual bird species and groups of bird species within your project area off the Atlantic Coast, please visit the Northeast Ocean Data Portal. The Portal also offers data and information about other taxa besides birds that may be helpful to you in your project review. Alternately, you may download the bird model results files underlying the portal maps through the NOAA NCCOS Integrative Statistical Modeling and Predictive Mapping of Marine Bird Distributions and Abundance on the Atlantic Outer Continental Shelf project webpage.

Bird tracking data can also provide additional details about occurrence and habitat use throughout the year, including migration. Models relying on survey data may not include this information. For additional information on marine bird tracking data, see the Diving Bird Study and the nanotag studies or contact Caleb Spiegel or Pam Loring.

What if I have eagles on my list?

If your project has the potential to disturb or kill eagles, you may need to obtain a permit to avoid violating the Eagle Act should such impacts occur.

Proper Interpretation and Use of Your Migratory Bird Report

The migratory bird list generated is not a list of all birds in your project area, only a subset of birds of priority concern. To learn more about how your list is generated, and see options for identifying what other birds may be in your project area, please see the FAQ “What does IPaC use to generate the migratory birds potentially occurring in my specified location”. Please be aware this report provides the “probability of presence” of birds within the 10 km grid cell(s) that overlap your project; not your exact project footprint. On the graphs provided, please also look carefully at the survey effort (indicated by the black vertical bar) and for the existence of the “no data” indicator (a red horizontal bar). A high survey effort is the key component. If the survey effort is high, then the probability of presence score can be viewed as more dependable. In contrast, a low survey effort bar or no data bar means a lack of data and, therefore, a lack of certainty about presence of the species. This list is not perfect; it is simply a starting point for identifying what birds of concern have the potential to be in your project area, when they might be there, and if they might be breeding (which means nests might be present). The list helps you know what to look for to confirm presence, and

NOT FOR CONSULTATION

helps guide you in knowing when to implement conservation measures to avoid or minimize potential impacts from your project activities, should presence be confirmed. To learn more about conservation measures, visit the FAQ "Tell me about conservation measures I can implement to avoid or minimize impacts to migratory birds" at the bottom of your migratory bird trust resources page.

Facilities

Wildlife refuges and fish hatcheries

REFUGE AND FISH HATCHERY INFORMATION IS NOT AVAILABLE AT THIS TIME

Wetlands in the National Wetlands Inventory

Impacts to NWI wetlands and other aquatic habitats may be subject to regulation under Section 404 of the Clean Water Act, or other State/Federal statutes.

For more information please contact the Regulatory Program of the local U.S. Army Corps of Engineers District.

WETLAND INFORMATION IS NOT AVAILABLE AT THIS TIME

This can happen when the National Wetlands Inventory (NWI) map service is unavailable, or for very large projects that intersect many wetland areas. Try again, or visit the NWI map to view wetlands at this location.

Data limitations

The Service's objective of mapping wetlands and deepwater habitats is to produce reconnaissance level information on the location, type and size of these resources. The maps are prepared from the analysis of high altitude imagery. Wetlands are identified based on vegetation, visible hydrology and geography. A margin of error is inherent in the use of imagery; thus, detailed on-the-ground inspection of any particular site may result in revision of the wetland boundaries or classification established through image analysis.

NOT FOR CONSULTATION

The accuracy of image interpretation depends on the quality of the imagery, the experience of the image analysts, the amount and quality of the collateral data and the amount of ground truth verification work conducted. Metadata should be consulted to determine the date of the source imagery used and any mapping problems.

Wetlands or other mapped features may have changed since the date of the imagery or field work. There may be occasional differences in polygon boundaries or classifications between the information depicted on the map and the actual conditions on site.

Data exclusions

Certain wetland habitats are excluded from the National mapping program because of the limitations of aerial imagery as the primary data source used to detect wetlands. These habitats include seagrasses or submerged aquatic vegetation that are found in the intertidal and subtidal zones of estuaries and nearshore coastal waters. Some deepwater reef communities (coral or tuberficid worm reefs) have also been excluded from the inventory. These habitats, because of their depth, go undetected by aerial imagery.

Data precautions

Federal, state, and local regulatory agencies with jurisdiction over wetlands may define and describe wetlands in a different manner than that used in this inventory. There is no attempt, in either the design or products of this inventory, to define the limits of proprietary jurisdiction of any Federal, state, or local government or to establish the geographical scope of the regulatory programs of government agencies. Persons intending to engage in activities involving modifications within or adjacent to wetland areas should seek the advice of appropriate federal, state, or local agencies concerning specified agency regulatory programs and proprietary jurisdictions that may affect such activities.

NOT FOR CONSULTATION

Appendix C

Education Outreach Materials

EVERY DROP

Small Changes. Big Difference.

We love our dogs! But dog waste carries harmful bacteria that can make our waters unsafe for drinking or swimming. So always pick it up and throw it in the trash!

This message helps the City meet its educational outreach requirements for the USEPA MS4 Stormwater Permit.

Stormwater is a pollution problem that affects everyone and if we all do our part to help, we can reach our goal of clean and healthy waterways.

Many NH towns have over 1,000 dogs living in them, and each dog "goes" once or twice a day. That's a lot of poop! Not only is it gross when it's left around, it can also be dangerous. Harmful bacteria and parasites—such as Giardia or Salmonella—that live in pet waste can come into contact with people or other pets, or wash into waterways and storm drains.

Take the pledge to Scoop the Poop! Please go to:

stateofourestuaries.org/everydrop/petpledge

or scan the QR code to go straight to the page.

EVERY DROP
Small Changes. Big Difference.

We love our dogs! But dog waste carries harmful microorganisms that can make our waters unsafe for swimming and drinking. Picking it up can be a major benefit, particularly in paved areas, and near streams and lakes.

Picking up our dog's waste and throwing it out properly is a small effort that can make a big difference in keeping our waters clean.

Appendix D

Written Illicit Discharge Detection and Elimination (IDDE) Plan

Illicit Discharge Detection and Elimination (IDDE) Plan

City of Portsmouth, New Hampshire

June 2019
FY 7 Update
August 2025

Table of Contents

Illicit Discharge Detection and Elimination Plan
City of Portsmouth, New Hampshire

1 Introduction 3
- 1.1 MS4 Program 3
- 1.2 Illicit Discharges 3
- 1.3 Allowable Non-Stormwater Discharges 4
- 1.4 Receiving Waters and Impairments 5
- 1.5 IDDE Program Goals, Framework, and Timeline 6
- 1.6 Work Completed to Date 8

2 Authority and Statement of IDDE Responsibilities 8
- 2.1 Legal Authority 8
- 2.2 Statement of Responsibilities 9

3 Stormwater System Mapping 9
- 3.1 Phase I Mapping 9
- 3.2 Phase II Mapping 10
- 3.3 Additional Recommended Mapping Elements 10

4 Sanitary Sewer Overflows (SSOs) 11

5 Assessment and Priority Ranking of Outfalls 17
- 5.1 Outfall Catchment Delineations 17
- 5.2 Outfall and Interconnection Inventory and Initial Ranking 17

6 Dry Weather Outfall Screening and Sampling 20
- 6.1 Weather Conditions 20
- 6.2 Dry Weather Screening/Sampling Procedure 20
  - 6.2.1 General Procedure 20
  - 6.2.2 Field Equipment 21
  - 6.2.3 Sample Collection and Analysis 22
- 6.3 Interpreting Outfall Sampling Results 25
- 6.4 Follow-up Ranking of Outfalls and Interconnections 25

7 Catchment Investigations 25
- 7.1 System Vulnerability Factors 26
- 7.2 Dry Weather Manhole Inspections 29
- 7.3 Wet Weather Outfall Sampling 30
- 7.4 Source Isolation and Confirmation 31

7.4.1 Sandbagging ... 31
7.4.2 Smoke Testing ... 32
7.4.3 Dye Testing ... 32
7.4.4 CCTV/Video Inspection ... 33
7.4.5 Optical Brightener Monitoring ... 33
7.5 Illicit Discharge Removal ... 33
7.5.1 Confirmatory Outfall Screening ... 34
7.6 Ongoing Screening ... 34

8 Training ... 34

9 Progress Reporting ... 34

Tables

Table 1-1. Impaired Waters, Portsmouth, New Hampshire ... 5
Table 1-2. IDDE Program Implementation Timeline ... 7
Table 4-1. SSO Inventory ... 12
Table 5-1. Outfall Inventory and Priority Ranking Summary ... 19
Table 6-1. Field Equipment – Dry Weather Outfall Screening and Sampling ... 21
Table 6-2. Sampling Parameters and Analysis Methods ... 23
Table 6-3. Required Analytical Methods, Detection Limits, Hold Times, and Preservatives ... 24
Table 6-4. Benchmark Field Measurements for Select Parameters ... 25
Table 7-1. Outfall Catchment System Vulnerability Factor (SVF) Inventory ... 28

Figures

Figure 1-1. IDDE Investigation Procedure Framework ... 7

Appendices

Appendix A – Legal Authority (IDDE Bylaw or Ordinance)
Appendix B – Storm System Mapping
Appendix C – Field Forms, Sample Bottle Labels, and Chain of Custody Forms
Appendix D – Water Quality Analysis Instructions, User's Manuals and SOPs
Appendix E – IDDE Employee Training Record
Appendix F – Source Isolation and Confirmation Methods: Instructions, Manuals, and SOPs

1 Introduction

1.1 MS4 Program

This Illicit Discharge Detection and Elimination (IDDE) Plan has been developed by Portsmouth to address the requirements of the United States Environmental Protection Agency's (USEPA's) 2017 National Pollutant Discharge Elimination System (NPDES) General Permit for Stormwater Discharges from Small Municipal Separate Storm Sewer Systems (MS4) in New Hampshire, hereafter referred to as the "2017 New Hampshire MS4 Permit" or "MS4 Permit."

The 2017 New Hampshire MS4 Permit requires that each permittee, or regulated community, address six Minimum Control Measures. These measures include the following:

1. Public Education and Outreach
2. Public Involvement and Participation
3. Illicit Discharge Detection and Elimination Program
4. Construction Site Stormwater Runoff Control
5. Stormwater Management in New Development and Redevelopment (Post Construction Stormwater Management); and
6. Good Housekeeping and Pollution Prevention for Permittee Owned Operations.

In addition to a Stormwater Management Plan (SWMP), the 2017 MS4 Permit requires the City to implement an Illicit Discharge Detection Elimination (IDDE) Plan to systematically find and eliminate sources of non-stormwater discharges into its separate storm sewer system and implement procedures to prevent such discharges. This written IDDE Plan has been prepared to address this requirement.

1.2 Illicit Discharges

An "illicit discharge" is any discharge to a drainage system that is not composed entirely of stormwater, with the exception of discharges pursuant to a NPDES permit (other than the NPDES permit for discharges from the MS4) and discharges resulting from fire-fighting activities.

Illicit discharges may take a variety of forms. Illicit discharges may enter the drainage system through direct or indirect connections. Direct connections may be relatively obvious, such as cross-connections of sewer services to the storm drain system. Indirect illicit discharges may be more difficult to detect or address, such as failing septic systems that discharge untreated sewage to a ditch within the MS4, or a sump pump that discharges contaminated water on an intermittent basis.

Some illicit discharges are intentional, such as dumping used oil (or other pollutant) into catch basins, a resident or contractor illegally tapping a new sewer lateral into a storm drain pipe to avoid the costs of a sewer connection fee and service, and illegal dumping of yard wastes into surface waters.

Some illicit discharges are related to the unsuitability of original infrastructure to the modern regulatory environment. Examples of illicit discharges in this category include connected floor drains in old buildings, as well as sanitary sewer overflows that enter the drainage system. Sump pumps legally connected to the storm drain system may be used inappropriately, such as for the disposal of floor washwater or old household products, in many cases due to a lack of understanding on the part of the homeowner.

Elimination of some discharges may require substantial costs and efforts, such as funding and designing a project to reconnect sanitary sewer laterals. Others, such as improving self-policing of dog waste management, can be accomplished by outreach in conjunction with the minimal additional cost of dog waste bins and the municipal commitment to disposal of collected materials on a regular basis.

Regardless of the intention, when not addressed, illicit discharges can contribute high levels of pollutants, such as heavy metals, toxics, oil, grease, solvents, nutrients, and pathogens to surface waters.

1.2.1 Allowable Non-Stormwater Discharges

The following categories of non-storm water discharges are allowed under the MS4 Permit unless the permittee, USEPA or New Hampshire Department of Environmental Services (NHDES) identifies any category or individual discharge of non-stormwater discharge as a significant contributor of pollutants to the MS4 regulated area:

- Water line flushing
- Landscape irrigation
- Diverted stream flows
- Rising ground water
- Uncontaminated ground water infiltration (as defined at 40 CFR 35.2005(20))
- Uncontaminated pumped groundwater
- Discharge from potable water sources
- Foundation drains
- Air conditioning condensation
- Irrigation water, springs
- Water from crawl space pumps
- Footing drains
- Lawn watering
- Individual resident car washing
- Flows from riparian habitats and wetlands
- De-chlorinated swimming pool discharges
- Street wash waters
- Residential building wash waters without detergents

If these discharges are identified as significant contributors to the MS4, they must be considered an "illicit discharge" and addressed in the IDDE Plan (i.e., control these sources so they are no longer significant contributors of pollutants, and/or eliminate them entirely).

1.2.2 Receiving Waters and Impairments

Table 1-1 lists the "impaired waters" within the boundaries of Portsmouth's regulated area based on the 2024 New Hampshire Integrated List of Waters. Impaired waters are water bodies that do not meet water quality standards for one or more designated use(s) such as recreation or aquatic habitat.

Table 1-1. Impaired Waters, Portsmouth, New Hampshire

Water Body Name	Assessment Unit ID	Outfall Count	Impairment(s)	Associated Approved TMDL
Lower Piscataqua River - South	NHEST600031001-02-02	30	Estuarine Bioassessments, PCBs, Dioxin, Mercury, Enterococcus	Bacteria (Enterococcus), Mercury
Upper Sagamore Creek	NHEST600031001-03	38	Acenaphthylene, Aluminum, Arsenic, Benzo(a)pyrene (PAHs), Benzo(a)anthracene, Cadmium, Chrysene (C1-C4), Copper, Chlorophyll-a, Dibenz(a,h)anthracene, Estuarine Bioassessments, Fluoranthene, Lead, Mercury, Nickel, Total Nitrogen, Phenanthrene, Pyrene, Trans-Nonachlor, PCBs, Dioxin, Enterococcus	Bacteria (Enterococcus), Mercury
Lower Sagamore Creek	NHEST600031001-04	5	Estuarine Bioassessments, PCBs, Dioxin, Chlorophyll-a, Dissolved oxygen, Mercury, Total Nitrogen, Enterococcus, Mercury	Bacteria (Enterococcus), Mercury
Back Channel	NHEST600031001-05	7	Estuarine Bioassessments, Light Attenuation, Mercury, PCBs, Dioxin	
South Mill Pond	NHEST600031001-09	16	Mercury, PCBs, Dioxin, Enterococcus	Bacteria (Enterococcus), Mercury
North Mill Pond	NHEST600031001-10	40	Mercury, PCBs, Dioxin, Enterococcus	Bacteria (Enterococcus), Mercury
Haines Brook-Unnamed Brook	NHRIV600030901-04	2	Mercury	Mercury
Pickering Brook	NHRIV600030904-06	13	Copper, Dissolved Oxygen, Dissolved Oxygen Saturation, Iron, pH, Mercury, Chloride, Enterococcus, Escherichia coli	Bacteria (Escherichia coli), Mercury

Unnamed Brook- To Piscataqua River	NHRIV600031001-02	12	Mercury	Mercury
Sagamore Creek	NHRIV600031001-03	10	Chloride, pH, Dissolved Oxygen, Dissolved Oxygen Saturation, Enterococcus, Mercury, Escherichia coli	Bacteria (Escherichia coli), Mercury
Lower Hodgson Brook	NHRIV600031001-04	9	Benthic-Macroinvertebrate Bioassessments (Streams), Chloride, Dissolved Oxygen, Dissolved Oxygen Saturation, pH, Enterococcus, Mercury, Escherichia coli	Bacteria (Escherichia coli), Mercury
Upper Hodgson Brook	NHRIV600031001-05	5	Benthic-Macroinvertebrate Bioassessments (streams), Chloride, Dissolved Oxygen Saturation, Dissolved Oxygen, Manganese, pH, Mercury, Escherichia coli, Habitat Assessments	Bacteria (Escherichia coli), Mercury, Habitat Assessments
Grafton Ditch	NHRIV600031001-06	3	Aluminum, Arsenic, Chromium (total), Copper, Iron, Lead, Manganese, Zinc, Mercury	Mercury
Borthwick Ave. Tributary	NHRIV600031001-09	10	Chloride, Dissolved Oxygen Saturation, Iron, pH Chloride, Dissolved Oxygen, pH, Mercury, Escherichia coli	Bacteria (Escherichia coli), Mercury
Newfields Ditch	NHRIV600031001-10	11	Chloride, Dissolved Oxygen Saturation, pH, Mercury, Escherichia coli	Bacteria (Escherichia coli), Mercury
Unnamed Brook	NHRIV600031001-21	1	Mercury	Mercury
Unnamed Brook to Back Channel	NHRIV600031001-24	2	Mercury	Mercury
Berry's Brook	NHRIV600031002-01	8	Dissolved Oxygen Saturation, pH, Mercury, Dissolved Oxygen, Escherichia coli	Bacteria (Escherichia coli), Mercury

1.3 IDDE Program Goals, Framework, and Timeline

The goals of the IDDE program are to find and eliminate illicit discharges to municipal separate storm sewer system and to prevent illicit discharges from happening in the future. The program consists of the following major components as outlined in the MS4 Permit:

- Legal authority and regulatory mechanism to prohibit illicit discharges and enforce this prohibition
- Storm system mapping
- Inventory and ranking of outfalls
- Dry weather outfall screening
- Catchment investigations
- Identification/confirmation of illicit sources
- Illicit discharge removal
- Follow-up screening
- Employee training.

The IDDE investigation procedure framework is shown in **Figure 1-1.** The required timeline for implementing the IDDE program is shown in **Table 1-2**.

Figure 1-1. IDDE Investigation Procedure Framework

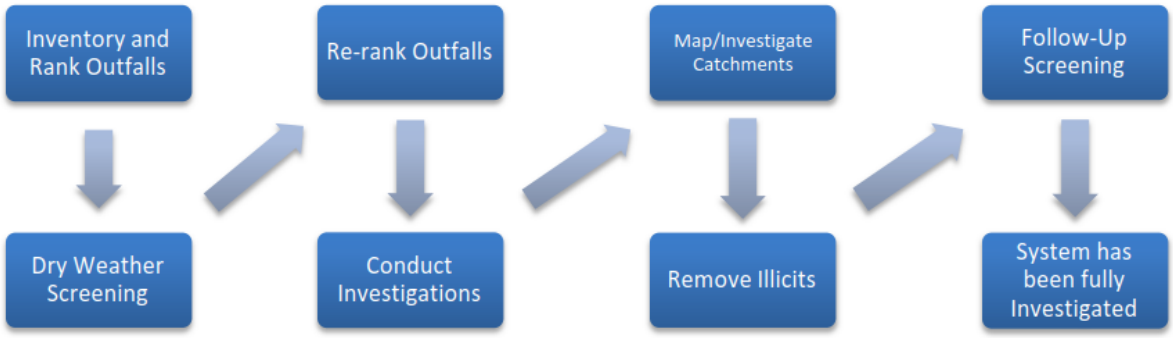

Table 1-2. IDDE Program Implementation Timeline

IDDE Program Requirement	Completion Date from Effective Date of Permit					
	1 Year	1.5 Years	2 Years	3 Years	7 Years	10 Years
Written IDDE Program Plan	***X***					
SSO Inventory	***X***					
Written Catchment Investigation Procedure		***X***				

IDDE Program Requirement	Completion Date from Effective Date of Permit					
	1 Year	1.5 Years	2 Years	3 Years	7 Years	10 Years
Phase I Mapping			X			
Phase II Mapping						X
IDDE Regulatory Mechanism or By-law (if not already in place)				X		
Dry Weather Outfall Screening				X		
Follow-up Ranking of Outfalls and Interconnections				X		
Catchment Investigations – Problem Outfalls					X	
Catchment Investigations – all Problem, High and Low Priority Outfalls						X

1.4 Work Completed to Date

The 2003 MS4 Permit required each MS4 community to develop a plan to detect illicit discharges using a combination of storm system mapping, adopting a regulatory mechanism to prohibit illicit discharges and enforce this prohibition, and identifying tools and methods to investigate suspected illicit discharges. Each MS4 community was also required to define how confirmed discharges would be eliminated and how the removal would be documented.

Portsmouth has completed the following IDDE program activities consistent with the 2003 MS4 Permit requirements:

- Developed a map of outfalls and receiving waters
- Adopted an IDDE bylaw
- Developed procedures for locating illicit discharges (i.e., visual screening of outfalls for dry weather discharges, dye or smoke testing)
- Developed procedures for locating the source of the discharge
- Developed procedures for removal of the source of an illicit discharge
- Developed procedures for documenting actions and evaluating impacts on the storm sewer system subsequent to removal

2 Authority and Statement of IDDE Responsibilities

2.1 Legal Authority

The City of Portsmouth adopted the Stormwater Management By-law (Chapter CCXC) in 2015. A copy of the Stormwater Management By-law is provided in **Appendix A**. The Stormwater Management By-law provides the Portsmouth Department of Public Works with adequate legal authority to:

- Prohibit illicit discharges
- Investigate suspected illicit discharges
- Eliminate illicit discharges, including discharges from properties not owned by or controlled by the MS4 that discharge into the MS4 system
- Implement appropriate enforcement procedures and actions.

The Portsmouth City Engineer will review its current Stormwater Management By-law and related land use regulations and policies for consistency with the 2017 MS4 Permit.

2.2 Statement of Responsibilities

The Portsmouth Department of Public Works is the lead municipal agent responsible for implementing the IDDE program pursuant to the provisions of the Stormwater Management By-law. Other departments with responsibility for aspects of the program include:

- Portsmouth DPW – Most program elements except those noted below.
- Planning Board – By-laws

3 Stormwater System Mapping

Portsmouth originally developed mapping of its stormwater system to meet the mapping requirements of the 2003 MS4 Permit. A copy of the existing storm system map is provided in **Appendix B**. The 2017 MS4 Permit requires a more detailed storm system map than was required by the 2003 MS4 Permit. The revised mapping is intended to facilitate the identification of key infrastructure, factors influencing proper system operation, and the potential for illicit discharges.

The 2017 MS4 Permit requires the storm system map to be updated in two phases as outlined below. The Department of Public Works is responsible for updating the stormwater system mapping pursuant to the 2017 MS4 Permit. Maynard will report on the progress towards completion of the storm system map in each annual report. Updates to the stormwater mapping will be included in **Appendix B**.

3.1 Phase I Mapping

The City has completed the Phase I mapping requirements consistent with the Permit, even though it is not required to be completed until two (2) years from the effective date of the permit (July 1, 2020). The Phase I mapping includes the following information:

- Outfalls and receiving waters (previously required by the MS4-2003 permit)
- Open channel conveyances (swales, ditches, etc.)
- Interconnections with other MS4s and other storm sewer systems
- Municipally owned stormwater treatment structures
- Water bodies identified by name and indication of all use impairments as identified on the most recent EPA approved New Hampshire Integrated List of Waters report
- Initial catchment delineations. Topographic contours and drainage system information may be used to produce initial catchment delineations.

3.2 Phase II Mapping

Phase II mapping must be completed within ten (10) years of the effective date of the permit (by July 1, 2027) and include the following information:

- Outfall spatial location (latitude and longitude with a minimum accuracy of +/-30 feet)
- Pipes
- Manholes
- Catch basins
- Refined catchment delineations. Catchment delineations must be updated to reflect information collected during catchment investigations.
- Municipal Sanitary Sewer system (if available)
- Municipal combined sewer system (if applicable).

The City of Portsmouth has completed the following updates to its stormwater mapping to meet the Phase II requirements:

- Outfalls and receiving waters (previously required by the MS4-2003 permit)
- Water bodies identified by name and indication of all use impairments as identified on the most recent EPA approved New Hampshire Integrated List of Waters report
- Initial catchment delineations. Any available system data and topographic information may be used to produce initial catchment delineations

Portsmouth will update its stormwater mapping by July 1, 2027 to include the remaining Phase II information.

3.3 Additional Recommended Mapping Elements

Although not specifically required by the 2017 MS4 Permit, Portsmouth will include the following recommended elements in its storm system mapping by the completion of the Phase II mapping efforts:

- Storm sewer material, size (pipe diameter), age
- Sanitary sewer system material, size (pipe diameter), age
- Privately owned stormwater treatment structures
- Where a municipal sanitary sewer system exists, properties known or suspected to be served by a septic system, especially in high density urban areas
- Area where the permittee's MS4 has received or could receive flow from septic system discharges
- Seasonal high water table elevations impacting sanitary alignments
- Topography
- Orthophotography
- Alignments, dates and representation of work completed of past illicit discharge investigations
- Locations of suspected confirmed and corrected illicit discharges with dates and flow estimates.

4 Sanitary Sewer Overflows (SSOs)

The 2017 MS4 Permit requires municipalities to prohibit illicit discharges, including sanitary sewer overflows (SSOs), to the separate storm sewer system. SSOs are discharges of untreated sanitary wastewater from a municipal sanitary sewer that can contaminate surface waters, cause serious water quality problems and property damage, and threaten public health. SSOs can be caused by blockages, line breaks, sewer defects that allow stormwater and groundwater to overload the system, power failures, improper sewer design, and vandalism.

Portsmouth has completed an inventory of SSOs that have discharged to the MS4 within the five (5) years prior to the effective date of the 2017 MS4 Permit, based on review of available documentation pertaining to SSOs (**Table 4-1**). The inventory includes all SSOs that occurred during wet or dry weather resulting from inadequate conveyance capacities or where interconnectivity of the storm and sanitary sewer infrastructure allows for transfer of flow between systems.

Upon detection of a future SSO, Portsmouth will eliminate it as expeditiously as possible and take interim measures to minimize the discharge of pollutants to and from its MS4 until the SSO is eliminated. Upon becoming aware of an SSO to the MS4, the Portsmouth will provide oral notice to EPA within 24 hours and written notice to EPA and NHDES within five (5) days of becoming aware of the SSO occurrence.

The inventory in **Table 4-1** will be updated by the DPW when new SSOs are detected. The SSO inventory will be included in the annual report, including the status of mitigation and corrective measures to address each identified SSO.

Table 4-1. SSO Inventory
Portsmouth, New Hampshire
Revision Date: March 2019

SSO Location[1]	Discharge Statement[2]	Time Start[3]	Time End[3]	Estimated Volume[4]	Description of Occurence	Mitigation Efforts	Mitigation Efforts Planned[7]
98 Brewster Street, 255 Vaughan Street, 105 Marcy Street, 230 Maplewood Ave, 126 Bridge Street,	Yes, all locations discharged into either an MS4 structure or directly overland into surface water bodies	6:00 pm, June 30, 2020	July 1, 2020	Unknown	The combined storm and sanitary sewer system significantly surcharged due to intense rain and a reduced capacity due to the sewer force main repairs on the Pierce Island Road Bridge	98 Brewster Street, 255 Vaughan Street, 105 Marcy Street, 230 Maplewood Ave, 126 Bridge Street,	Yes, all locations discharged into either an MS4 structure or directly overland into surface water bodies
Pierce Island	No, the SSO did not discharge to either the MS4 or open water source	6:15 am, September 10, 2020	September 11, 2020	80,000 gallons	The 24 inch sewer force main on pierce island broke. The cause is being investigated	Pierce Island	No, the SSO did not discharge to either the MS4 or open water source
Haven Road	Yes, the SSO discharged into an MS4 structure and then the Piscataqua River	2:05 pm September 21, 2020	2:15 pm, September 21, 2020	50 Gallons discharged, approximately 1 gallon into MS4 structure	A brick was found in the invert of SMH 1119 causing a blockage and the manhole surcharged.	Haven Road	Yes, the SSO discharged into an MS4 structure and then the Piscataqua River
Peirce Island	No, the SSO did not discharge to either the MS4 or open water source	March 15, 2021	March 15, 2021	Unknown	Temporary trailers used during the construction of the Peirce Island WWTF were connected to the wet well and pumps of the Peirce Island pool house. During a winter cleaning of the pool house it is thought that the pumps were turned off due to the seasonal nature of the facility. This caused the wet well to surcharge and overflow to a grass area.	Peirce Island	No, the SSO did not discharge to either the MS4 or open water source
Deer Street	Yes the SSO discharged to the Piscataqua River	1:20 pm July 9, 2021	2:20 pm July 9, 2021	Unknown	A significant rain event occurred and overwhelmed the combined sewer system resulting in two sewer manholes in the Deer Street at Market Street intersection surcharging.	Deer Street	Yes the SSO discharged to the Piscataqua River
Edmond Ave	No, the SSO did not discharge to either the MS4 or open water source	10:00 am July 22, 2021	1:30 pm July 22, 2021	8 gallons	Sewage was found bubbling out of the ground on Edmond Ave. The City excavated the location and found a break in a small diameter sewer force main. The break appeared to be due to poor soils.	Edmond Ave	No, the SSO did not discharge to either the MS4 or open water source
Peverly Hill Road	Yes, the SSO discharged into an MS4 structure and into Sagamore Creek	2:45 pm September 8, 2021	3:45 pm September 8, 2021	50 gallons	A contractor was repairing the bench and invert of a SMH and plugged the upstream manhole to keep their work dry. The plugged upstream manhole filled and surcharged onto the street.	Peverly Hill Road	Yes, the SSO discharged into an MS4 structure and into Sagamore Creek

Urban Forestry Center, 299 Vaughan Street, 98 Brewster Street, 96 Bridge Street, 86 Thornton Street	Yes, all locations discharged into either an MS4 structure or directly overland into surface water bodies	October 31, 2021	November 1, 2021	Unknown	The combined storm and sanitary sewer system significantly surcharged due to intense rain.	Urban Forestry Center, 299 Vaughan Street, 98 Brewster Street, 96 Bridge Street, 86 Thornton Street	Yes, all locations discharged into either an MS4 structure or directly overland into surface water bodies
Edmond Ave	No, the SSO did not discharge to either the MS4 or open water source	11:20 am December 19, 2021	1:30 pm December 19, 2021	8 - 10 gallons	Sewage was found bubbling out of the ground on Edmond Ave. The City excavated the location and found a break in a small diameter sewer force main. The break appeared to be due to recent paving and compaction on the surface above the pipe. The compaction pushed the pipe onto a rock that broke the pipe.	Edmond Ave	No, the SSO did not discharge to either the MS4 or open water source
Peirce Island	No, the SSO did not discharge to either the MS4 or open water source	12:15 pm January 28, 2022	12:15 pm January 28, 2022	100 Gallons	An air release valve on the temporary sewer force main was frozen due to cold temperatures. During replacement of the valve approximately 100 gallons of sewage discharged onto the ground.	Peirce Island	No, the SSO did not discharge to either the MS4 or open water source
CSO Structure 10A	No. One of the four alarms at CSO structure 10A registered an event. There was no SSO but a 5 day follow up letter was created to follow up the initial phone call to regulators.	3/16/2022	3/16/2022	0 gallons	Work was being completed in the Peirce Island WWTF. The Mechanic Street Pump Station was powered off to allow this work to be completed. The wet well was monitored an did not reach a level that is known to cause a CSO event. It is possible that some wastewater splashed over the weir in the CSO structure but it is not certain and there was no quantifiable volume.	CSO Structure 10A	No. One of the four alarms at CSO structure 10A registered an event. There was no SSO but a 5 day follow up letter was created to follow up the initial phone call to regulators.
CSO Structure 10A	Yes, the SSO entered into South Mill Pond and the Piscataqua River	11:50 am May 7, 2022	12:25 pm May 7, 2022	32,400 gallons	On May 6, 2022 the internet connection between various City buildings was lost and all SCADA communications and alarms were lost. There was a failure at the Mechanic Street Pump Station that resulted in the pumps shutting down. The low level alarm at the treatment facility that the City assumed would alert staff of a failure did not alarm. The sewer system surcharged resulting in an SSO out of CSO structure 10A. The CSO structure alarm was not affected by the down SCADA system and alerted staff of the SSO. Approximately 32,400 gallons discharged from CSO structure 10A	CSO Structure 10A	Yes, the SSO entered into South Mill Pond and the Piscataqua River
501 Islington Street	Yes the SSO entered into the MS4 system and entered North Mill Pond	Unknown	June 9, 2022	Unknown	A sewer separation project was completed on Islington Street. After the project was completed two toilets were found connected to the MS4 system. This can be considered an illicit discharge.	501 Islington Street	Yes the SSO entered into the MS4 system and entered North Mill Pond
99 Peirce Island Road	No, the SSO did not discharge to either the MS4 or open water source	11:30am June 25, 2022	12:30pm June 25, 2022	20-30 gallons	The wet well of the pump station located at the outdoor pool facility surcharged onto the grassy area around the wet well. The seasonal pool facility opened that day and the power to the pump station was not turned on.	99 Peirce Island Road	No, the SSO did not discharge to either the MS4 or open water source
824 State Street	Yes, the SSO entered into the MS4 system	Unknown - notified 6/29/2022	July 5, 2022	Unknown	An older sanitary sewer service was improperly installed at the same elevation as the MS4 system, crossing through the MS4 main. A leak developed at this connection and the sewer service leaked into the MS4 system.	824 State Street	Yes, the SSO entered into the MS4 system
3400 Lafayette Road	No, the SSO did not discharge to either the	7:00am November 21, 2022	11:50 am November 21, 2022	100 Gallons	New utilities were installed crossing the existing sewer force main for a new development. It is assumed that the weight of	3400 Lafayette Road	No, the SSO did not discharge to either the MS4 or open water source

	MS4 or open water source				construction vehicles at the edge of the utility crossing area and new settlement characteristics caused the radial crack.		
7 Melcher Street	No, the SSO did not discharge to either the MS4 or open water source	1:10pm December 2, 2022	1:25pm December 2, 2022	Unknown	A buildup of rags in the downstream sewer main resulted in the upstream sewer manhole surcharging onto the surrounding grass area.	7 Melcher Street	No, the SSO did not discharge to either the MS4 or open water source
580 Portsmouth Traffic Circle	Yes, the SSO entered the MS4 system and entered Hodgson Brook	December 17, 2022	December 19, 2022	12,000 gallons	The SSO occurred on a private sewer main located at 580 Portsmouth Traffic Circle. The grease trap of the Roundabout Diner became overwhelmed. A blockage of grease occurred in the downstream sewer main resulting in an upstream sewer manhole in their parking lot surcharging. The SSO occurred on a private sewer main on a weekend resulting in the City not being notified until Monday. The duration and volume of discharge is unknown but it is estimated to be approximately 12,000 gallons.	580 Portsmouth Traffic Circle	Yes, the SSO entered the MS4 system and entered Hodgson Brook
Elwyn Road Cross Country Main	Yes, the SSO entered Sagamore Creek	6:00 am January 25, 2023	3:00am January 26, 2023	50,400 gallons (diluted)	A severe wet weather event occurred after a period of wet weather that saturated the ground, and snow on the ground that melted during the rain event. The previous wet weather events lead to stress at a downstream sewer pump station resulting in the pumps failing during this wet weather event. The inundation of stormwater and the resulting failure of a downstream pump station lead to the SSO event in the combined sewer collection system. Five sewer manholes surcharged.	Elwyn Road Cross Country Main	Yes, the SSO entered Sagamore Creek
Grafton Road	Yes, the SSO entered the MS4 system, but did not reach any surface water or infiltration basin	1:30pm January 28, 2023	2:00pm January 28, 2023	50 gallons	A buildup of grit in a private sewer service manhole resulted in the sewer manhole surcharging across the Grafton Road at Pease Golf Course driveway. The discharge traveled over the road into the grass and into a catch basin. The catch basin sump contained the SSO and was cleaned.	Grafton Road	Yes, the SSO entered the MS4 system, but did not reach any surface water or infiltration basin
Mirona Road Extension	No, the SSO did not discharge to either the MS4 or open water source	3:00pm February 3, 2023	3:00pm February 3, 2023	75 gallons	A blockage occurred in the downstream sewer main resulted in the upstream sewer manhole surcharging. The wastewater was contained in the road, grass area, and the extreme cold temperatures resulted in the wastewater freezing before it could migrate.	Mirona Road Extension	No, the SSO did not discharge to either the MS4 or open water source
101 Route 1 Bypass	Yes, the SSO entered the MS4 system and entered the Piscataqua River	Unknown - Notified 2/22/2023	February 22, 2023	Unknown	The grease trap at this location was improperly maintained resulting in the grease trap surcharging into a nearby catch basin in their parking lot. At the time of notification there was no active SSO but evidence that one had occurred was visible. Due to the private nature of the grease trap and lack of notification or known duration the volume of the SSO cannot be estimated.	101 Route 1 Bypass	Yes, the SSO entered the MS4 system and entered the Piscataqua River
3400 Lafayette Road	No, the SSO did not discharge to either the MS4 or open water source	7:00am February 24, 2023	9:00am February 24, 2023	50 gallons	New utilities were installed crossing the existing sewer force main for a new development. It is assumed new settlement characteristics caused the radial crack.	3400 Lafayette Road	No, the SSO did not discharge to either the MS4 or open water source
7 Islington Street	No, the SSO did not discharge to either the MS4 or open water source	11:00am April 8, 2023	11:30am April 8, 2023	7-10 gallons	A blockage occurred in the downstream sewer main resulting in the upstream sewer manhole overflowing.	7 Islington Street	No, the SSO did not discharge to either the MS4 or open water source

Urban Forestry Center Cross Country Sewer (Elwyn Road Cross Country)	Yes, the SSO entered Sagamore Creek	3:00am May 1, 2023	12:00pm May 1, 2023	16,200 gallons (diluted)	A severe wet weather event resulted in three sewer manholes surcharging and discharging into the Sagamore Creek. Approximately 3 inches of rain fell in a short period of time and the combined collection system became overwhelmed.	Urban Forestry Center Cross Country Sewer (Elwyn Road Cross Country)	Yes, the SSO entered Sagamore Creek
135 Commerce Way	Yes, the SSO entered the adjacent wetlands and eventually the Piscataqua River	2:45pm July 13, 2023	3:40pm July 13, 2023	7-10 gallons	A blockage in the downstream sewer main resulted in the upstream sewer manhole overflowing.	135 Commerce Way	Yes, the SSO entered the adjacent wetlands and eventually the Piscataqua River
Bluefish Boulevard	No, the SSO did not discharge to either the MS4 or open water source	12:00pm September 26, 2023	3:00pm September 26, 2023	900 gallons	A contractor was excavating to repair a leaking water service and struck a private sewer force main.	Bluefish Boulevard	No, the SSO did not discharge to either the MS4 or open water source
3 Gosling Road	Yes, the SSO entered a nearby wetland	Unknown - Notified 9/27/2023	27-Sep-23	Unknown	A privately owned pump station for a hotel was improperly maintained resulting in the failure of the private wastewater pump station. The wet well surcharged into the nearby wetlands.	3 Gosling Road	Yes, the SSO entered a nearby wetland
Vaughan Mall	Yes, the SSO entered the MS4 system	Unknown - Notified 8/30/24	August 30, 2024	Unknown	A grease blockage in the sewer main and a break in the sewer pipe wall resulted wastewater flowing out of the sewer and into the sidewall of a nearby catch basin.	The City flushed the main to remove the grease blockage and repaired the broken sewer pipe.	The City has developed a grease interceptor program and maintenance requirements for food preparation establishments. These efforts will reduce the amount of grease entering into the sewer mains. This area is part of the Fleet Street Reconstruction Project. Design to replace the aged sewer mains is ongoing.
187 Edmond Ave	No, the SSO did not discharge to either the MS4 or open water source	3:20pm September 27, 2024	4:15pm September 27, 2024	10 gallons	Sewage was found on the ground on Edmond Ave. The City excavated the location and found a break in a small diameter sewer force main. The break appeared to be caused by poor soils used during backfilling.	The City repaired the broken section of sewer force main and used suitable backfill materials.	The City is designing a sewer main replacement project on Edmond Avenue.
Robert Ave	No, the SSO did not discharge to either the MS4 or open water source	9:00pm October 18, 2024	9:00pm October 18, 2024	5 gallons	A backflow preventor in the sewer manhole was blocked with grease from tenants in the surrounding apartment buildings. The City was notified of wastewater in basement apartments on Robert Ave. When opening a sewer manhole to investigate approximately 5 gallons of wastewater surcharged out of a sewer manhole.	The City used a vactor truck to drain the sewer manhole and removed the grease blocking the check valve.	The City provided documents to the apartment complex showing that the apartment complex was responsible for the ongoing maintenance of the check valve and level alarms inside of the sewer manhole. The City will investigate the ongoing maintenance requirements specified in their agreement and hold the apartment complex accountable for maintaining their check valve and alarms.
Ceres Street	Yes, the SSO entered into an MS4 structure and entered the Piscataqua River	6:22pm December 27, 2024	8:00pm December 27, 2024	10-15 gallons	A grease blockage in the downstream sewer manhole caused the SSO.	The City used a vactor truck to drain the sewer manhole and a jet truck to clear the downstream blockage.	The City has developed a grease interceptor program and maintenance requirements for food preparation establishments. These efforts will reduce the amount of grease entering into the sewer mains.

Cutts Street	Yes, the SSO entered North Mill Pond and the Piscataqua River	Unknown - Notified 2/18/25	11:00am February 18, 2025	Unknown	A buildup of grit and rags in the downstream sewer main caused a blockage and the SSO.	The City used a vactor truck to drain the sewer manhole and a jet truck to clear the downstream blockage.	The resident was instructed to inform the City immediately if they see wastewater exiting a sewer manhole. The resident had waited several days before informing the City.
Ceres Street	Yes, the SSO entered into an MS4 structure and entered the Piscataqua River	11:20 am February 26, 2025	11:55am February 26, 2025	200 gallons	A grease blockage in the downstream sewer manhole caused the SSO.	The City used a vactor truck to drain the sewer manhole and a jet truck to clear the downstream blockage.	The City has developed a grease interceptor program and maintenance requirements for food preparation establishments. These efforts will reduce the amount of grease entering into the sewer mains. The City also sent staff to each upstream food preparation establishment and inspected their grease interceptor maintenance logs.

5 Assessment and Priority Ranking of Outfalls

As described below, the City has completed an assessment and priority ranking of its outfalls in terms of their potential to have illicit discharges and related public health significance consistent with the 2017 MS4 Permit. The ranking will be used to determine the priority order for performing IDDE investigations and meeting permit milestones.

5.1 Initial Outfall Catchment Delineations

A catchment is the area that drains to an individual outfall[1] or interconnection.[2] The catchments for each of the MS4 outfalls will be delineated to define contributing areas for investigation of potential sources of illicit discharges. Catchments are typically delineated based on topographic contours and mapped drainage infrastructure, where available. As described in **Section 3**, initial catchment delineations will be completed as part of the Phase I mapping, and refined catchment delineations will be completed as part of the Phase II mapping to reflect information collected during catchment investigations

5.2 Outfall and Interconnection Inventory and Initial Ranking

The DPW will complete an initial outfall and interconnection inventory and priority ranking to assess illicit discharge potential based on existing information. The initial inventory and ranking will be completed within one (1) year from the effective date of the permit. An updated inventory and ranking will be provided in each annual report thereafter. The inventory will be updated annually to include data collected in connection with dry weather screening and other relevant inspections.

The outfall and interconnection inventory will identify each outfall and interconnection discharging from the MS4, record its location and condition, and provide a framework for tracking inspections, screenings and other IDDE program activities.

Outfalls and interconnections will be classified into one of the following categories:

1. **Problem Outfalls**: Outfalls/interconnections with known or suspected contributions of illicit discharges based on existing information shall be designated as Problem

[1] **Outfall** means a point source as defined by 40 CFR § 122.2 as the point where the municipal separate storm sewer discharges to waters of the United States. An outfall does not include open conveyances connecting two municipal separate storm sewers or pipes, tunnels or other conveyances that connect segments of the same stream or other waters of the United States and that are used to convey waters of the United States. Culverts longer than a simple road crossing shall be included in the inventory unless the permittee can confirm that they are free of any connections and simply convey waters of the United States.

[2] **Interconnection** means the point (excluding sheet flow over impervious surfaces) where the permittee's MS4 discharges to another MS4 or other storm sewer system, through which the discharge is conveyed to waters of the United States or to another storm sewer system and eventually to a water of the United States.

Outfalls. This shall include any outfalls/interconnections where previous screening indicates likely sewer input. Likely sewer input indicators are any of the following:

- Olfactory or visual evidence of sewage,
- Ammonia ≥ 0.5 mg/L, surfactants ≥ 0.25 mg/L, and bacteria levels greater than the water quality criteria applicable to the receiving water, or
- Ammonia ≥ 0.5 mg/L, surfactants ≥ 0.25 mg/L, and detectable levels of chlorine.

Dry weather screening and sampling, as described in **Section 6** of this IDDE Plan and Part 2.3.4.7.b of the MS4 Permit, is not required for Problem Outfalls.

2. **High Priority Outfalls**: Outfalls/interconnections that have not been classified as Problem Outfalls and that are:

    - Discharging to an area of concern to public health due to proximity of public beaches, recreational areas, drinking water supplies or shellfish beds
    - Determined by the permittee as high priority based on the characteristics listed below or other available information.

3. **Low Priority Outfalls**: Outfalls/interconnections determined by the permittee as low priority based on the characteristics listed below or other available information.

4. **Excluded outfalls**: Outfalls/interconnections with no potential for illicit discharges may be excluded from the IDDE program. This category is limited to roadway drainage in undeveloped areas with no dwellings and no sanitary sewers; drainage for athletic fields, parks or undeveloped green space and associated parking without services; cross-country drainage alignments (that neither cross nor are in proximity to sanitary sewer alignments) through undeveloped land.

Outfalls will be ranked into the above priority categories (<u>except for excluded outfalls, which may be excluded from the IDDE program</u>) based on the following characteristics of the defined initial catchment areas, where information is available. Additional relevant characteristics, including location-specific characteristics, may be considered but must be documented in this IDDE Plan.

- **Previous screening results** – previous screening/sampling results indicate likely sewer input (see criteria above for Problem Outfalls).
- **Past discharge complaints and reports.**
- **Poor receiving water quality** – the following guidelines are recommended to identify waters as having a high illicit discharge potential:
    - Exceeding water quality standards for bacteria
    - Ammonia levels above 0.5 mg/l
    - Surfactants levels greater than or equal to 0.25 mg/l

- **Density of generating sites** – Generating sites are those places, including institutional, municipal, commercial, or industrial sites, with a potential to generate pollutants that could contribute to illicit discharges. Examples of these sites include, but are not limited to, car dealers; car washes; gas stations; garden centers; and industrial manufacturing areas.
- **Age of development and infrastructure** – Industrial areas greater than 40 years old and areas where the sanitary sewer system is more than 40 years old will probably have a high illicit discharge potential. Developments 20 years or younger will probably have a low illicit discharge potential.
- **Sewer conversion** – Contributing catchment areas that were once serviced by septic systems, but have been converted to sewer connections may have a high illicit discharge potential.
- **Historic combined sewer systems** – Contributing areas that were once serviced by a combined sewer system, but have been separated may have a high illicit discharge potential.
- **Surrounding density of aging septic systems** – Septic systems thirty years or older in residential land use areas are prone to have failures and may have a high illicit discharge potential.
- **Culverted streams** – Any river or stream that is culverted for distances greater than a simple roadway crossing may have a high illicit discharge potential.
- **Water quality limited waterbodies** that receive a discharge from the MS4 or waters with approved TMDLs applicable to the permittee, where illicit discharges have the potential to contain the pollutant identified as the cause of the water quality impairment.

An initial outfall inventory and priority ranking summary based on the aforementioned parameters can be found in **Table 5-1** below.

Table 5-1. Outfall Inventory and Priority Ranking Summary
Revision Date: May 2019

Outfall Priority	# of Outfalls
Problem	0
High Priority	156
Low Priority	49
Excluded	0
Total Outfalls	**205**

6 Dry Weather Outfall Screening and Sampling

Dry weather flow is a common indicator of potential illicit connections. The MS4 Permit requires all outfalls/interconnections (excluding Problem and excluded Outfalls) to be inspected for the presence of dry weather flow. The DPW is responsible for conducting dry weather outfall screening, starting with High Priority outfalls, followed by Low Priority outfalls, based on the initial priority rankings described in the previous section.

6.1 Weather Conditions

Dry weather outfall screening and sampling may occur when no more than 0.1 inches of rainfall has occurred in the previous 24-hour period and no significant snow melt is occurring. For purposes of determining dry weather conditions, DPW staff will use precipitation data available online at Weather Underground (wunderground.com) for three personal weather stations within or closest to Portsmouth. If any of the three stations document more than 0.1 inches of rainfall in the previous 24-hour period, DPW staff will not count that as a dry weather period.

For purposes of determining dry weather conditions, program staff will use precipitation data from NOAA Station KNHPORTS22 (Portsmouth 22) on Columbia Street in Portsmouth, NH . If Portsmouth 22 Station is not available or not reporting current weather data, then NOAA Station KNHPORTS16 (Portsmouth 16) on Middle Street will be used as a back-up. (KNHPORTS10 station as third backup)

6.2 Dry Weather Screening/Sampling Procedure

6.2.1 General Procedure

The dry weather outfall inspection and sampling procedure consists of the following general steps:

1. Identify outfall(s) to be screened/sampled based on initial outfall inventory and priority ranking
2. Acquire the necessary staff, mapping, and field equipment (see **Table 6-1** for list of potential field equipment)
3. Conduct the outfall inspection during dry weather:
    a. Mark and photograph the outfall
    b. Record the inspection information and outfall characteristics (using paper forms or digital form using a tablet or similar device) (see form in **Appendix C**)
    c. Look for and record visual/olfactory evidence of pollutants in flowing outfalls including odor, color, turbidity, and floatable matter (suds, bubbles,

excrement, toilet paper or sanitary products). Also observe outfalls for deposits and stains, vegetation, and damage to outfall structures.

4. **If flow is observed, sample and test the flow following the procedures described in the following sections.**
5. If no flow is observed, but evidence of illicit flow exists (illicit discharges are often intermittent or transitory), revisit the outfall during dry weather within one week of the initial observation, if practicable, to perform a second dry weather screening and sample any observed flow. Other techniques can be used to detect intermittent or transitory flows including conducting inspections during evenings or weekends and using optical brighteners.
6. Input results from screening and sampling into spreadsheet/database. Include pertinent information in the outfall/interconnection inventory and priority ranking.
7. Include all screening data in the annual report.

Previous outfall screening/sampling conducted under the 2003 MS4 Permit may be used to satisfy the dry weather outfall/screening requirements of the 2017 MS4 Permit only if the previous screening and sampling was substantially equivalent to that required by the 2017 MS4 Permit, including the list of analytes outlined in Section 2.3.4.7.b.iii.4 of the 2017 permit.

6.2.2 Field Equipment

Table 6-1 lists field equipment commonly used for dry weather outfall screening and sampling.

Table 6-1. Field Equipment – Dry Weather Outfall Screening and Sampling

Equipment	Use/Notes
Clipboard	For organization of field sheets and writing surface
Field Sheets	Field sheets for both dry weather inspection and Dry weather sampling should be available with extras
Chain of Custody Forms	To ensure proper handling of all samples
Pens/Pencils/Permanent Markers	For proper labeling
Nitrile Gloves	To protect the sampler as well as the sample from contamination
Flashlight/headlamp w/batteries	For looking in outfalls or manholes, helpful in early mornings as well
Cooler with Ice	For transporting samples to the laboratory
Digital Camera	For documenting field conditions at time of inspection
Personal Protective Equipment (PPE)	Reflective vest, Safety glasses and boots at a minimum
GPS Receiver	For taking spatial location data
Water Quality Sonde	If needed, for sampling conductivity, temperature, pH
Water Quality Meter	Hand held meter, if available, for testing for various water quality parameters such as ammonia, surfactants and chlorine
Test Kits	Have extra kits on hand to sample more outfalls than are anticipated to be screened in a single day

Equipment	Use/Notes
Label Tape	For labeling sample containers
Sample Containers	Make sure all sample containers are clean. Keep extra sample containers on hand at all times. Make sure there are proper sample containers for what is being sampled for (i.e., bacteria requires sterile containers).
Pry Bar or Pick	For opening catch basins and manholes when necessary
Sandbags	For damming low flows in order to take samples
Small Mallet or Hammer	Helping to free stuck manhole and catch basin covers
Utility Knife	Multiple uses
Measuring Tape	Measuring distances and depth of flow
Safety Cones	Safety
Hand Sanitizer	Disinfectant/decontaminant
Zip Ties/Duct Tape	For making field repairs
Rubber Boots/Waders	For accessing shallow streams/areas
Sampling Pole/Dipper/Sampling Cage	For accessing hard to reach outfalls and manholes

6.2.3 Sample Collection and Analysis

If flow is present during a dry weather outfall inspection, a sample will be collected and analyzed for the required permit parameters[3] listed in **Table 6-3**. The general procedure for collection of outfall samples is as follows:

1. Fill out all sample information on sample bottles and field sheets (see **Appendix C** for Sample Labels and Field Sheets)
2. Put on protective gloves (nitrile/latex/other) before sampling
3. Collect sample with dipper or directly in sample containers. If possible, collect water from the flow directly in the sample bottle. Be careful not to disturb sediments.
4. If using a dipper or other device, triple rinse the device with distilled water and then in water to be sampled (not for bacteria sampling)
5. Use test strips, test kits, and field meters (rinse similar to dipper) for most parameters (see **Table 6-3**)
6. Place laboratory samples on ice for analysis of bacteria and pollutants of concern
7. Fill out chain-of-custody form (**Appendix C**) for laboratory samples
8. Take samples to the Pierce Island Wasterwater Treatment Facility for analysis
9. Dispose of used test strips and test kit ampules properly
10. Decontaminate all testing personnel and equipment

In the event that an outfall is submerged, either partially or completely, or inaccessible, field staff will proceed to the first accessible upstream manhole or structure for the observation

[3] Other potentially useful parameters, although not required by the MS4 Permit, include **fluoride** (indicator of potable water sources in areas where water supplies are fluoridated), **potassium** (high levels may indicate the presence of sanitary wastewater), and **optical brighteners** (indicative of laundry detergents).

and sampling and report the location with the screening results. Field staff will continue to the next upstream structure until there is no longer an influence from the receiving water on the visual inspection or sampling.

Field test kits or field instrumentation are permitted for all parameters except indicator bacteria and any pollutants of concern. Field kits need to have appropriate detection limits and ranges. **Table 6-2** lists various field test kits and field instruments that can be used for outfall sampling associated with the 2017 MS4 Permit parameters, other than indicator bacteria and any pollutants of concern. Analytic procedures and user's manuals for field test kits and field instrumentation are provided in **Appendix D**.

Table 6-2. Sampling Parameters and Analysis Methods

Analyte or Parameter	Instrumentation (Portable Meter)	Field Test Kit
Ammonia	CHEMetrics™ V-2000 Colorimeter Hach™ DR/890 Colorimeter Hach™ Pocket Colorimeter™ II	CHEMetrics™ K-1410 CHEMetrics™ K-1510 (series) Hach™ NI-SA Hach™ Ammonia Test Strips
Surfactants (Detergents)	CHEMetrics™ I-2017	CHEMetrics™ K-9400 and K-9404 Hach™ DE-2
Chlorine	CHEMetrics™ V-2000, K-2513 Hach™ Pocket Colorimeter™ II	NA
Conductivity	CHEMetrics™ I-1200 YSI Pro30 YSI EC300A Oakton 450	NA
Temperature	YSI Pro30 YSI EC300A Oakton 450	NA
Salinity	YSI Pro30 YSI EC300A Oakton 450	NA
Temperature	YSI Pro30 YSI EC300A Oakton 450	NA
Indicator Bacteria: *E. coli* (freshwater) or Enterococcus (saline water)	EPA certified laboratory procedure (40 CFR § 136)	NA
Pollutants of Concern[1]	EPA certified laboratory procedure (40 CFR § 136)	NA

[1] Where the discharge is directly into a water quality limited water or a water subject to an approved TMDL, the sample must be analyzed for the pollutant(s) of concern identified as the cause of the water quality impairment.

Testing for indicator bacteria and any pollutants of concern must be conducted using analytical methods and procedures found in 40 CFR § 136.[4] Samples for laboratory analysis must also be stored and preserved in accordance with procedures found in 40 CFR § 136. **Table 6-3** lists analytical methods, detection limits, hold times, and preservatives for laboratory analysis of dry weather sampling parameters.

Table 6-3. Required Analytical Methods, Detection Limits, Hold Times, and Preservatives[4]

Analyte or Parameter	Analytical Method	Detection Limit	Max. Hold Time	Preservative
Ammonia	**EPA**: 350.2, **SM**: 4500-NH3C	0.05 mg/L	28 days	Cool ≤6°C, H_2SO_4 to pH <2, No preservative required if analyzed immediately
Surfactants	**SM**: 5540-C	0.01 mg/L	48 hours	Cool ≤6°C
Chlorine	**SM**: 4500-Cl G	0.02 mg/L	Analyze within 15 minutes	None Required
Temperature	**SM**: 2550B	*NA*	Immediate	None Required
Specific Conductance	**EPA**: 120.1, **SM**: 2510B	0.2 µs/cm	28 days	Cool ≤6°C
Salinity	**SM**: 2520	-	28 days	Cool ≤6°C
Indicator Bacteria: *E.coli* Enterococcus	*E.coli* **EPA**: 1603 **SM**: 9221B, 9221F , 9223 B **Other**: Colilert ®, Colilert-18® *Enterococcus* **EPA**: 1600 **SM**: 9230 C **Other**: Enterolert®	*E.coli* **EPA**: 1 cfu/100mL **SM**: 2 MPN/100mL **Other**: 1 MPN/100mL *Enterococcus* **EPA**: 1 cfu/100mL **SM**: 1 MPN/100mL **Other**: 1 MPN/100mL	8 hours	Cool ≤10°C, 0.0008% $Na_2S_2O_3$
Total Phosphorus	**EPA**: Manual-365.3, Automated Ascorbic acid digestion-365.1 Rev. 2, ICP/AES4-200.7 Rev. 4.4 **SM**: 4500-P E-F	**EPA**: 0.01 mg/L **SM** : 0.01 mg/L	28 days	Cool ≤6°C, H_2SO_4 to pH <2
Total Nitrogen (Ammonia + Nitrate/Nitrite, n to be combined with Ammonia listed above.)	**EPA**: Cadmium reduction (automated)-353.2 Rev. 2.0, **SM**: 4500-NO_3 E-F	**EPA**: 0.05 mg/L **SM** : 0.05 mg/L	28 days	Cool ≤6°C, H_2SO_4 to pH <2

SM = Standard Methods

[4] 40 CFR § 136: *ecfr.gov/cgi-bin/text-idx?SID=b3b41fdea0b7b0b8cd6c4304d86271b7&mc=true&node=pt40.25.136&rgn=div5*

6.3 Interpreting Outfall Sampling Results

Outfall analytical data from dry weather sampling can be used to help identify the major type or source of discharge. **Table 6-4** shows values identified by the U.S. EPA and the Center for Watershed Protection as typical screening values for select parameters. These represent the typical concentration (or value) of each parameter expected to be found in stormwater. **Reported values that exceed these benchmarks may be indicative of pollution and/or illicit discharges.**

Table 6-4. Benchmark Field Measurements for Select Parameters

Analyte or Parameter	Benchmark
Ammonia	>0.5 mg/L
Conductivity	>2,000 µS/cm
Surfactants	>0.25 mg/L
Chlorine	>0.02 mg/L (detectable levels per the 2017 MS4 Permit)
Indicator Bacteria[5]: *E.coli* *Enterococcus*[6]	*E.coli*: the geometric mean of the five most recent samples taken during the same bathing season shall not exceed 126 colonies per 100 ml and no single sample taken during the bathing season shall exceed 235 colonies per 100 ml *Enterococcus:* the geometric mean of the three most recent samples taken during a 60-day period shall not exceed 35 colonies per 100 ml and no single sample taken during the bathing season shall exceed 104 colonies per 100 ml

6.4 Follow-up Ranking of Outfalls and Interconnections

Based on information gathered during dry weather screening, outfalls will be reevaluated and re-prioritized as either High or Low priority before initiating more detailed catchment investigations. Outfalls and/or interconnections where indicators of sanitary sewer or other illicit discharges were detected or suspected (i.e., possible evidence observed but inconclusive) will be considered or remain as High Priority outfalls.

The rankings will be updated periodically as dry weather screening information becomes available but will be completed within three (3) years of the effective date of the permit (by July 1, 2021).

[5] EPA Illicit Discharge Detection and Elimination: A Guidance Manual: epa.gov/npdes/pubs/idde_chapter-12.pdf
[6] NHDES Water Division: des.nh.gov/organization/divisions/water/wmb/beaches/faq_advisories.htm

7 Catchment Investigations

Consistent with Section 2.3.4.8 of the MS4 permit, following completion of the dry weather screening of the high and low priority outfalls, the City will initiate catchment area investigations. Outfalls/catchment areas will then be reevaluated and reprioritized based on the dry weather screening results and the additional screening data discussed below.

Once stormwater outfalls with evidence of illicit discharges have been identified, various methods can be used to trace the source of the potential discharge within the outfall catchment area. Catchment investigation techniques include but are not limited to review of maps, historic plans, and records; manhole observation; dry and wet weather sampling; video inspection; smoke testing; and dye testing. This section outlines a systematic procedure to investigate outfall catchments to trace the source of potential illicit discharges. All data collected as part of the catchment investigations will be recorded and reported in each annual report.

7.1 System Vulnerability Factors

The DPW will review relevant mapping and historic plans and records to identify areas within the catchment with higher potential for illicit connections. The following information will be reviewed:

- Plans related to the construction of the drainage network
- Plans related to the construction of the sewer drainage network
- Prior work on storm drains or sewer lines
- Board of Health or other municipal data on septic systems
- Complaint records related to SSOs
- Septic system breakouts.

Based on the review of this information, the presence of any of the following **System Vulnerability Factors (SVFs)** will be identified for each catchment:

- History of SSOs, including, but not limited to, those resulting from wet weather, high water table, or fat/oil/grease blockages
- Common or twin-invert manholes serving storm and sanitary sewer alignments
- Common trench construction serving both storm and sanitary sewer alignments
- Crossings of storm and sanitary sewer alignments where the sanitary system is shallower than the storm drain system
- Sanitary sewer alignments known or suspected to have been constructed with an underdrain system
- Inadequate sanitary sewer level of service (LOS) resulting in regular surcharging, customer back-ups, or frequent customer complaints
- Areas formerly served by combined sewer systems

- Sanitary sewer infrastructure defects such as leaking service laterals, cracked, broken, or offset sanitary infrastructure, directly piped connections between storm drain and sanitary sewer infrastructure, or other vulnerability factors identified through Inflow/Infiltration Analyses, Sanitary Sewer Evaluation Surveys, or other infrastructure investigations
- Sewer pump/lift stations, siphons, or known sanitary sewer restrictions where power/equipment failures or blockages could readily result in SSOs
- Any sanitary sewer and storm drain infrastructure greater than 40 years old
- Widespread code-required septic system upgrades required at property transfers (indicative of inadequate soils, water table separation, or other physical constraints of the area rather that poor owner maintenance)
- History of multiple Board of Health actions addressing widespread septic system failures (indicative of inadequate soils, water table separation, or other physical constraints of the area rather that poor owner maintenance).

A SVF inventory will be documented for each catchment (see **Table 7-1**), retained as part of this IDDE Plan, and included in the annual report.

Table 7-1. Outfall Catchment System Vulnerability Factor (SVF) Inventory
Portsmouth, New Hampshire
Revision Date: ##DATE OF LAST UPDATE

Outfall ID	Receiving Water	1 History of SSOs	2 Common or Twin Invert Manholes	3 Common Trench Construction	4 Storm/Sanitary Crossings (Sanitary Above)	5 Sanitary Lines with Underdrains	6 Inadequate Sanitary Level of Service	7 Areas Formerly Served by Combined Sewers	8 Sanitary Infrastructure Defects	9 SSO Potential In Event of System Failures	10 Sanitary and Storm Drain Infrastructure >40 years Old	11 Septic with Poor Soils or Water Table Separation	12 History of BOH Actions Addressing Septic Failure
Sample 1	XYZ River	Yes/No	Yes/No	Yes/No	Yes/No	Yes/No	Yes/No	Yes/No	Yes/No	Yes/No	Yes/No	Yes/No	Yes/No

Presence/Absence Evaluation Criteria:

1. History of SSOs, including, but not limited to, those resulting from wet weather, high water table, or fat/oil/grease blockages
2. Common or twin-invert manholes serving storm and sanitary sewer alignments
3. Common trench construction serving both storm and sanitary sewer alignments
4. Crossings of storm and sanitary sewer alignments where the sanitary system is shallower than the storm drain system
5. Sanitary sewer alignments known or suspected to have been constructed with an underdrain system
6. Inadequate sanitary sewer level of service (LOS) resulting in regular surcharging, customer back-ups, or frequent customer complaints
7. Areas formerly served by combined sewer systems
8. Sanitary sewer infrastructure defects such as leaking service laterals, cracked, broken, or offset sanitary infrastructure, directly piped connections between storm drain and sanitary sewer infrastructure, or other vulnerability factors identified through Inflow/Infiltration Analyses, Sanitary Sewer Evaluation Surveys, or other infrastructure investigations
9. Sewer pump/lift stations, siphons, or known sanitary sewer restrictions where power/equipment failures or blockages could readily result in SSOs
10. Any sanitary sewer and storm drain infrastructure greater than 40 years old
11. Widespread code-required septic system upgrades required at property transfers (indicative of inadequate soils, water table separation, or other physical constraints of the area rather that poor owner maintenance)
12. History of multiple Board of Health actions addressing widespread septic system failures (indicative of inadequate soils, water table separation, or other physical constraints of the area rather that poor owner maintenance)

7.2 Dry Weather Manhole Inspections

Portsmouth will implement a dry weather storm drain network investigation that involves systematically and progressively observing, sampling and evaluating key junction manholes in the MS4 to determine the approximate location of suspected illicit discharges or SSOs.

The DPW will be responsible for implementing the dry weather manhole inspection program and making updates as necessary. Infrastructure information will be incorporated into the storm system map, and catchment delineations will be refined based on the field investigation, where necessary. The SVF inventory will also be updated based on information obtained during the field investigations, where necessary.

Several important terms related to the dry weather manhole inspection program are defined by the MS4 Permit as follows:

- **Junction Manhole** is a manhole or structure with two or more inlets accepting flow from two or more MS4 alignments. Manholes with inlets solely from private storm drains, individual catch basins, or both are not considered junction manholes for these purposes.
- **Key Junction Manholes** are those junction manholes that can represent one or more junction manholes without compromising adequate implementation of the illicit discharge program. Adequate implementation of the illicit discharge program would not be compromised if the exclusion of a particular junction manhole as a key junction manhole would not affect the permittee's ability to determine the possible presence of an upstream illicit discharge. A permittee may exclude a junction manhole located upstream from another located in the immediate vicinity or that is serving a drainage alignment with no potential for illicit connections.

For all catchments identified for investigation, during dry weather, field crews will systematically inspect **key junction manholes** for evidence of illicit discharges. This program involves progressive inspection and sampling at manholes in the storm drain network to isolate and eliminate illicit discharges.

The manhole inspection methodology will be conducted in one of two ways (or a combination of both):

- By working progressively up from the outfall and inspecting key junction manholes along the way, or
- By working progressively down from the upper parts of the catchment toward the outfall.

For most catchments, manhole inspections will proceed from the outfall moving up into the system. However, the decision to move up or down the system depends on the nature of the drainage system and the surrounding land use and the availability of information on the catchment and drainage system. Moving up the system can begin immediately when an

illicit discharge is detected at an outfall, and only a map of the storm drain system is required. Moving down the system requires more advance preparation and reliable drainage system information on the upstream segments of the storm drain system, but may be more efficient if the sources of illicit discharges are believed to be located in the upstream portions of the catchment area. Once a manhole inspection methodology has been selected, investigations will continue systematically through the catchment.

Inspection of key junction manholes will proceed as follows:

1. Manholes will be opened and inspected for visual and olfactory evidence of illicit connections. A sample field inspection form is provided in **Appendix C**.
2. If flow is observed, a sample will be collected and analyzed at a minimum for ammonia, chlorine, and surfactants. Field kits can be used for these analyses. Sampling and analysis will be in accordance with procedures outlined in **Section 6**. Additional indicator sampling may assist in determining potential sources (e.g., bacteria for sanitary flows, conductivity to detect tidal backwater, etc.).
3. Where sampling results or visual or olfactory evidence indicate potential illicit discharges or SSOs, the area draining to the junction manhole will be flagged for further upstream manhole investigation and/or isolation and confirmation of sources.
4. Subsequent key junction manhole inspections will proceed until the location of suspected illicit discharges or SSOs can be isolated to a pipe segment between two manholes.
5. If no evidence of an illicit discharge is found, catchment investigations will be considered complete upon completion of key junction manhole sampling.

7.3 Wet Weather Outfall Sampling

Where a minimum of one (1) System Vulnerability Factor (SVF) is identified based on previous information or the catchment investigation, a wet weather investigation must also be conducted at the associated outfall. The DPW will be responsible for implementing the wet weather outfall sampling program and making updates as necessary.

Outfalls will be inspected and sampled under wet weather conditions, to the extent necessary, to determine whether wet weather-induced high flows in sanitary sewers or high groundwater in areas served by septic systems result in discharges of sanitary flow to the MS4.

Wet weather outfall sampling will proceed as follows:

1. At least one wet weather sample will be collected at the outfall for the same parameters required during dry weather screening.
2. Wet weather sampling will occur during or after a storm event of sufficient depth or intensity to produce a stormwater discharge at the outfall. There is no specific rainfall amount that will trigger sampling, although minimum storm event intensities

that are likely to trigger sanitary sewer interconnections are preferred. To the extent feasible, sampling should occur during the spring (March through June) when groundwater levels are relatively high.

3. If wet weather outfall sampling indicates a potential illicit discharge, then additional wet weather source sampling will be performed, as warranted, or source isolation and confirmation procedures will be followed as described in **Section 7.4**.
4. If wet weather outfall sampling does not identify evidence of illicit discharges, and no evidence of an illicit discharge is found during dry weather manhole inspections, catchment investigations will be considered complete.

7.4 Source Isolation and Confirmation

Once the source of an illicit discharge is approximated between two manholes, more detailed investigation techniques will be used to isolate and confirm the source of the illicit discharge. The following methods may be used in isolating and confirming the source of illicit discharges

- Sandbagging
- Smoke Testing
- Dye Testing
- CCTV/Video Inspections
- Optical Brightener Monitoring
- IDDE Canines

These methods are described in the sections below. Instructions and Standard Operating Procedures (SOPs) for these and other IDDE methods are provided in **Appendix F**.

Public notification is an important aspect of a detailed source investigation program. Prior to smoke testing, dye testing, or TV inspections, the DPW will notify property owners in the affected area. Smoke testing notification will include ##ROBOCALLS, ##HANGING NOTIFICATIONS, ## EMAIL for single family homes, businesses and building lobbies for multi-family dwellings.

7.4.1 Sandbagging

This technique can be particularly useful when attempting to isolate intermittent illicit discharges or those with very little perceptible flow. The technique involves placing sandbags or similar barriers (e.g., caulking, weirs/plates, or other temporary barriers) within outlets to manholes to form a temporary dam that collects any intermittent flows that may occur. Sandbags are typically left in place for 48 hours, and should only be installed when dry weather is forecast. If flow has collected behind the sandbags/barriers after 48 hours it can be assessed using visual observations or by sampling. If no flow collects behind the sandbag, the upstream pipe network can be ruled out as a source of the intermittent

discharge. Finding appropriate durations of dry weather and the need for multiple trips to each manhole makes this method both time-consuming and somewhat limiting.

7.4.2 Smoke Testing

Smoke testing involves injecting non-toxic smoke into drain lines and noting the emergence of smoke from sanitary sewer vents in illegally connected buildings or from cracks and leaks in the system itself. Typically, a smoke bomb or smoke generator is used to inject the smoke into the system at a catch basin or manhole and air is then forced through the system. Test personnel are place in areas where there are suspected illegal connections or cracks/leaks, noting any escape of smoke (indicating an illicit connection or damaged storm drain infrastructure). It is important when using this technique to make proper notifications to area residents and business owners as well as local police and fire departments.

If the initial test of the storm drain system is unsuccessful then a more thorough smoke-test of the sanitary sewer lines can also be performed. Unlike storm drain smoke tests, buildings that do not emit smoke during sanitary sewer smoke tests may have problem connections and may also have sewer gas venting inside, which is hazardous.

It should be noted that smoke may cause minor irritation of respiratory passages. Residents with respiratory conditions may need to be monitored or evacuated from the area of testing altogether to ensure safety during testing.

7.4.3 Dye Testing

Dye testing involves flushing non-toxic dye into plumbing fixtures such as toilets, showers, and sinks and observing nearby storm drains and sewer manholes as well as stormwater outfalls for the presence of the dye. Similar to smoke testing, it is important to inform local residents and business owners. Police, fire, and local public health staff should also be notified prior to testing in preparation of responding to citizen phone calls concerning the dye and their presence in local surface waters.

A team of two or more people is needed to perform dye testing (ideally, all with two-way radios). One person is inside the building, while the others are stationed at the appropriate storm sewer and sanitary sewer manholes (which should be opened) and/or outfalls. The person inside the building adds dye into a plumbing fixture (i.e., toilet or sink) and runs a sufficient amount of water to move the dye through the plumbing system. The person inside the building then radios to the outside crew that the dye has been dropped, and the outside crew watches for the dye in the storm sewer and sanitary sewer, recording the presence or absence of the dye.

The test can be relatively quick (about 30 minutes per test), effective (results are usually definitive), and inexpensive. Dye testing is best used when the likely source of an illicit discharge has been narrowed down to a few specific houses or businesses.

7.4.4 CCTV/Video Inspection

Another method of source isolation involves the use of mobile video cameras that are guided remotely through stormwater drain lines to observe possible illicit discharges. IDDE program staff can review the videos and note any visible illicit discharges. While this tool is both effective and usually definitive, it can be costly and time consuming when compared to other source isolation techniques.

7.4.5 Optical Brightener Monitoring

Optical brighteners are fluorescent dyes that are used in detergents and paper products to enhance their appearance. The presence of optical brighteners in surface waters or dry weather discharges suggests there is a possible illicit discharge or insufficient removal through adsorption in nearby septic systems or wastewater treatment. Optical brightener monitoring can be done in two ways. The most common, and least expensive, methodology involves placing a cotton pad in a wire cage and securing it in a pipe, manhole, catch basin, or inlet to capture intermittent dry weather flows. The pad is retrieved at a later date and placed under UV light to determine the presence/absence of brighteners during the monitoring period. A second methodology uses handheld fluorometers to detect optical brighteners in water sample collected from outfalls or ambient surface waters. Use of a fluorometer, while more quantitative, is typically more costly and is not as effective at isolating intermittent discharges as other source isolation techniques.

8 Illicit Discharge Removal

When the specific source of an illicit discharge is identified, Portsmouth will exercise its authority as necessary to require its removal. The annual report will include the status of IDDE investigation and removal activities including the following information for each confirmed source:

- The location of the discharge and its source(s)
- A description of the discharge
- The method of discovery
- Date of discovery
- Date of elimination, mitigation or enforcement action OR planned corrective measures and a schedule for completing the illicit discharge removal
- Estimate of the volume of flow removed.

8.1 Confirmatory Outfall Screening

Within one (1) year of removal of all identified illicit discharges within a catchment area, confirmatory outfall or interconnection screening will be conducted. The confirmatory screening will be conducted in dry weather unless System Vulnerability Factors have been identified, in which case both dry weather and wet weather confirmatory screening will be conducted. If confirmatory screening indicates evidence of additional illicit discharges, the catchment will be scheduled for additional investigation.

9 Ongoing Screening

Upon completion of all catchment investigations and illicit discharge removal and confirmation (if necessary), each outfall or interconnection will be re-prioritized for screening and scheduled for ongoing screening once every five (5) years. Ongoing screening will consist of dry weather screening and sampling consistent with the procedures described in **Section 6** of this plan. Ongoing wet weather screening and sampling will also be conducted at outfalls where wet weather screening was required due to System Vulnerability Factors and will be conducted in accordance with the procedures described in **Section 7.3**. All sampling results will be reported in the annual report.

10 Training

Annual IDDE training will be made available to all employees involved in the IDDE program. This training will at a minimum include information on how to identify illicit discharges and SSOs and may also include additional training specific to the functions of particular personnel and their function within the framework of the IDDE program. Training records will be maintained in **Appendix E**. The frequency and type of training will be included in the annual report.

11 Progress Reporting

The progress and success of the IDDE program will be evaluated on an annual basis. The evaluation will be documented in the annual report and will include the following indicators of program progress:

- Number of SSOs and illicit discharges identified and removed
- Number and percent of total outfall catchments served by the MS4 evaluated using the catchment investigation procedure
- Number of dry weather outfall inspections/screenings
- Number of wet weather outfall inspections/sampling events
- Number of enforcement notices issued

- All dry weather and wet weather screening and sampling results
- Estimate of the volume of sewage removed, as applicable
- Number of employees trained annually.

The success of the IDDE program will be measured by the IDDE activities completed within the required permit timelines.

Appendix A

Legal Authority (IDDE Bylaw or Ordinance)

CITY OF PORTSMOUTH, NEW HAMPSHIRE

SITE PLAN REVIEW REGULATIONS

Adopted by Planning Board: December 17, 2009
Amended: November 19, 2020

SITE PLAN REVIEW REGULATIONS

ARTICLE 1 PURPOSE AND APPLICABILITY 1

SECTION 1.1 PURPOSE 1
SECTION 1.2 APPLICABILITY 1

ARTICLE 2 APPLICATION AND REVIEW PROCESS 3

SECTION 2.1 PLANNING BOARD RESPONSIBILITIES 3
SECTION 2.2 SITE PLAN REVIEW TECHNICAL ADVISORY COMMITTEE 3
SECTION 2.3 TECHNICAL REVIEW AND ASSISTANCE 4
SECTION 2.4 PREAPPLICATION REVIEW 4
SECTION 2.5 APPLICATION REQUIREMENTS 6
SECTION 2.6 REFERRALS TO CITY DEPARTMENTS 13
SECTION 2.7 PUBLIC HEARING 13
SECTION 2.8 DETERMINATION OF APPLICATION COMPLETENESS 14
SECTION 2.9 EVALUATION CRITERIA 15
SECTION 2.10 WAIVER REQUESTS 16
SECTION 2.11 APPROVAL PROCEDURES 16
SECTION 2.12 SITE PLAN REVIEW AGREEMENT 17
SECTION 2.13 RECORDING OF SITE PLANS 17
SECTION 2.14 APPROVAL EXPIRATION AND EXTENSION 18
SECTION 2.15 POST APPROVAL PROCEDURES 19
SECTION 2.16 PROJECT INSPECTION AND COMPLETION 20
SECTION 2.17 EXEMPTION OF APPROVED SITE PLAN FROM CHANGES IN LAND USE REGULATIONS 21

ARTICLE 3 VEHICULAR CIRCULATION STANDARDS 23

SECTION 3.1 GENERAL PROVISIONS 23
SECTION 3.2 OFF-SITE IMPACTS 23
SECTION 3.3 GENERAL ACCESSWAY AND DRIVEWAY DESIGN 24
SECTION 3.4 CURBING 25
SECTION 3.5 TRAFFIC CALMING AND CONNECTIONS 25
SECTION 3.6 DRIVE-THROUGH FACILITIES 25
SECTION 3.7 LOADING AND SERVICE AREAS 27
SECTION 3.8 FIRE LANES 28
SECTION 3.9 MASS TRANSIT FACILITIES 28

ARTICLE 4 PARKING AREA STANDARDS 29

SECTION 4.1 PARKING PROVISION 29
SECTION 4.2 REQUIREMENTS FOR ACCESSIBLE PARKING FOR THE PHYSICALLY DISABLED 29
SECTION 4.3 OFF-STREET PARKING SPACE DESIGN AND LAYOUT 29

ARTICLE 5 PEDESTRIAN AND BICYCLE CIRCULATION 30

SECTION 5.1 GENERAL PROVISIONS 30
SECTION 5.2 SIDEWALKS AND PEDESTRIAN PATHWAYS 30
SECTION 5.3 BICYCLE FACILITIES 31

ARTICLE 6 LANDSCAPING AND SCREENING STANDARDS 33

SECTION 6.1 GENERAL PROVISIONS 33
SECTION 6.2 LANDSCAPING PLAN 33
SECTION 6.3 GENERAL REQUIREMENTS 34
SECTION 6.4 PLANTING REQUIREMENTS 35
SECTION 6.5 PLANT SELECTION 37
SECTION 6.6 LANDSCAPED AREAS 37
SECTION 6.7 LANDSCAPING ALONG PUBLIC RIGHTS OF WAY 38
SECTION 6.8 PERIMETER LANDSCAPING 39
SECTION 6.9 SCREENING 39
SECTION 6.10 MAINTENANCE AND REPLACEMENT OF LANDSCAPING AND SCREENING 40
SECTION 6.11 IRRIGATION 40
SECTION 6.12 INNOVATIVE LANDSCAPING PRACTICES 41

ARTICLE 7 WATER RESOURCES STANDARDS 42

SECTION 7.1 LOW IMPACT DEVELOPMENT (LID) 42
SECTION 7.2 GENERAL WATER QUALITY AND STORMWATER MANAGEMENT PROVISIONS 42
SECTION 7.3 WELLHEAD PROTECTION AREAS 43
SECTION 7.4 STORMWATER MANAGEMENT AND EROSION CONTROL PLAN (SMECP) 43
SECTION 7.5 CONSTRUCTION EROSION CONTROL DESIGN STANDARDS 45
SECTION 7.6 POST-CONSTRUCTION STORMWATER MANAGEMENT DESIGN STANDARDS 47

ARTICLE 8 UTILITIES STANDARDS 53

SECTION 8.1 GENERAL PROVISIONS. 53
SECTION 8.2 WATER SUPPLY AND DISTRIBUTION SYSTEM 53
SECTION 8.3 SANITARY SEWERS 54
SECTION 8.4 OTHER UTILITIES 54

SECTION 8.5 OVERSIZE AND OFF-SITE IMPROVEMENTS 55

ARTICLE 9 ON-SITE WASTE STORAGE AND DISPOSAL STANDARDS 56

SECTION 9.1 WASTE ACCUMULATION 56
SECTION 9.2 STORAGE CONTAINERS 56
SECTION 9.3 LOCATION AND DISPOSAL 56
SECTION 9.4 FLAMMABLE AND COMBUSTIBLE LIQUIDS 57
SECTION 9.5 SCREENING 57

ARTICLE 10 OUTDOOR LIGHTING 58

SECTION 10.1 GENERAL PROVISIONS 58
SECTION 10.2 COMPLIANCE WITH ZONING ORDINANCE 58
SECTION 10.3 LIGHTING PLAN 58
SECTION 10.4 LAMPS 59

ARTICLE 11 RADIO COMMUNICATIONS STANDARDS 60

SECTION 11.1 SITE SURVEY 60

ATTACHMENT A: DIGITAL AS-BUILT PLAN REQUIREMENTS 61

ATTACHMENT B: TOPSOIL SPECIFICATIONS 62

Article 1 Purpose and Applicability

Section 1.1 Purpose

The purposes of these Regulations are to:

(a) Further the safe and orderly development of the City;

(b) Promote sustainable design and development that supports long-term economic vitality and ecologic integrity;

(c) Achieve a high-quality and sustainable site appearance that conserves and protects natural resource systems, helps to reduce infrastructure costs, and conserves energy;

(d) Encourage site design techniques that protect water quality and natural hydrology, prevent increases in the quantity of stormwater runoff, and manage stormwater runoff at the source;

(e) Protect abutters against hazards, unsightliness, and nuisances detrimental to property values;

(f) Insure that development of land is appropriate for the public and private services and facilities available;

(g) Insure that pedestrian, bicycle, and vehicular circulation can be accommodated in a safe manner;

(h) Preserve and enhance the historic and cultural character of the community.

Section 1.2 Applicability

1.2.1 Uses Requiring Site Plan Approval

Site Plans shall be submitted for Site Plan Review for any development or redevelopment of land within the municipal boundaries that includes one or more of the following:

(a) Residential development or redevelopment which, when completed, will have three (3) or more dwelling units regardless of whether the development involves a subdivision of land;

(b) Nonresidential development or redevelopment including alterations, additions or extensions (including the addition of a drive-through facility),

or new nonresidential uses that increase the amount of required off-street parking by five (5) or more spaces;

(c) The addition of five (5) or more parking spaces.

1.2.2 Exemption of Small Projects

The Planning Director may determine that a proposed development is exempt from Site Plan Review if it meets all of the following three criteria:

(a) There is no increase in building height or gross floor area; and

(b) There is no reduction in the setback of any structure or vehicular service area from any property line; and

(c) Lot coverage by impervious surfaces does not increase by more than 500 square feet.

1.2.3 Determination of Developments of Regional Impact

1. The Planning Board shall make a determination as to whether the proposed development has the potential for regional impact.

2. In determining whether a project has regional impact, the Planning Board may consider, but is not limited to the consideration of, such factors as: the relative size or number of dwelling units compared to the existing housing stock, the proximity to the borders of a neighboring community, transportation networks, anticipated emissions or environmental impacts such as light, noise, smoke, odors, or particles, the proximity to aquifers or surface waters which transcend municipal boundaries, water demand, and shared facilities such as schools, wastewater treatment plants, and solid waste disposal facilities or other criteria as allowed under NH State Law.

1.2.4 Other Local, State, and Federal Requirements

1. These Site Plan Review Regulations in no way relieve a developer, agent or individual from compliance with the Zoning Ordinance, Subdivision Rules and Regulations, Building Codes, Historic District Commission, standard construction plans and specifications of the Department of Public Works, or any other federal, state and local ordinance, regulation, or code that pertains to the proposed development.

2. The Site Plan Review Agreement shall not be executed until all other required municipal approvals have been granted.

Article 2 Application and Review Process

Section 2.1 Planning Board Responsibilities

The Planning Board and the Site Plan Review Technical Advisory Committee (TAC) are responsible for the review of all Site Plan Review applications.

Section 2.2 Site Plan Review Technical Advisory Committee

2.2.1 Committee Composition

A Site Plan Review Technical Advisory Committee (TAC) is hereby established to assist and advise the Planning Board in reviewing Site Plan Review applications. The TAC shall consist of nine (9) members as follows:

(a) The Planning Director or a representative of the Planning Department as designated by the Director (either of whom shall act as Chair);

(b) Two (2) representatives of the Planning Department as designated by the Director;

(c) The Director of Public Works or a representative of the Department of Public Works as designated by the Director;

(d) Two (2) representatives from the Divisions of the Department of Public Works as designated by the Director of Public Works;

(e) The Chief Building Inspector or a representative of the Inspection Department as designated by the Chief Building Inspector;

(f) A representative of the Fire Department as designated by the Fire Chief;

(g) A representative of the Police Department as designated by the Police Chief.

2.2.2 Technical Advisory Committee Responsibilities

The Site Plan Review Technical Advisory Committee (TAC) shall make recommendations to the Planning Board for approval or disapproval of all Site Plan Review applications.

Section 2.3 Technical Review and Assistance

1. The TAC or the Planning Board may request any additional information it deems necessary in order to find that the application satisfies the review standards.

2. The TAC or the Planning Board may request information or technical assistance from City staff, Boards, or Commissions, or from independent experts in any field. If the TAC or the Planning Board determines that it requires the assistance of independent consultants, the applicant shall agree in advance to fund or reimburse the City for all costs of engaging such consultants.

3. When the TAC or the Planning Board notifies the applicant of the need for technical assistance or additional information, then the time periods for review and approval of a Site Plan Review application shall be waived only upon written request by the applicant. In the event that such a request is not forthcoming, the Planning Board may deny the application.

Section 2.4 Preapplication Review

2.4.1 Preapplication Review – General

1. An applicant may request to meet with the Planning Board for preliminary nonbinding discussions of a proposal as provided herein. An applicant may request to meet with the Board for either Preliminary Conceptual Consultation or Design Review, or both. The preliminary conceptual consultation phase is mandatory for certain applications as stated in Section 2.4.2 below.

2. Discussions in the Preliminary Conceptual Consultation and Design Review Phases shall not bind either the applicant or the Board. Statements made by Planning Board members during either phase shall not be a basis for disqualifying said members or invalidating any action subsequently taken by the Board.

3. Preliminary review shall be separate and apart from formal consideration of an application for Site Plan Review, and the time limits for acting on a proposal shall not apply until a formal application has been submitted and has been determined by the Planning Board to be complete.

2.4.2 Preliminary Conceptual Consultation Phase

1. The applicant may request a meeting with the Planning Board to discuss a proposal in conceptual form. The preliminary conceptual consultation phase is mandatory for a site plan that meets any of the following criteria:

(a) Includes the construction of 30,000 square feet or more gross floor area;
(b) Includes the creation of 20 or more dwelling units;
(c) Includes the construction of more than one principal structure on a single parcel.

2. A request for preliminary conceptual consultation accompanied by all plans and exhibits shall be submitted to the Planning Department at least 14 days prior to the date of a scheduled meeting of the Board via the City's online permitting system and in hard copy. The total number of hard copies required shall be determined by the Planning Director.

3. Preliminary conceptual consultation may occur only at formal meetings of the Planning Board. However, such discussions shall not be the subject of a public hearing, and formal notice of abutters and the public shall not be required.

4. Preliminary conceptual consultation shall be directed at review of the basic concept of the proposal and suggestions that might be of assistance in resolving problems with meeting requirements during final consideration. The Board and the applicant may discuss proposals in conceptual form only and in general terms such as the desirability of the proposed development type, scale, intensity and layout under the Master Plan.

2.4.3 Design Review Phase

1. The applicant may request to meet with the Board for nonbinding discussions of a potential application that involve more specific design and engineering details than in the preliminary conceptual consultation phase.

2. A request for design review accompanied by all plans and exhibits shall be submitted to the Planning Department at least 14 days prior to the date of a scheduled meeting of the Board via the City's online permitting system as well as in hard copy. The total number of hard copies required shall be determined by the Planning Director.

3. The request for design review shall include enough of the information listed in Section 2.5.3(1) and plans displaying enough of the information listed in Section 2.5.4(3) so that the Board is able to review the project. Detailed engineering of infrastructure and utilities are not required at the design review phase, but the information listed in Section 2.5.4(3) should be displayed in sufficient detail to enable the Board to understand the proposed project and identify potential issues and concerns.

4. At a regular meeting of the Planning Board, the Board shall determine if the request for design review includes sufficient information to allow the Board

to understand the project and identify potential issues and concerns, and shall vote on whether to accept the request for design review and to schedule a public hearing. If the Board determines that the request does not describe the proposed project in sufficient detail, it shall notify the applicant of the specific deficiencies that need to be addressed.

5. Design review discussions shall take place in a public hearing at a regularly scheduled meeting of the Planning Board, after notice to abutters, holders of conservation, preservation, or agricultural preservation restrictions, and the general public as required by State statute.

6. At any public meeting of the Planning Board, the Board may determine that the design review process of an application has ended and shall inform the applicant in writing within 10 days of such determination.

Section 2.5 Application Requirements

2.5.1 Applicant

An application for Site Plan Review shall be submitted by the owner or lessee of the parcel or parcels, or by the holder of an option or other contract for purchase or lease of the property. If the applicant is not the current owner, the application shall include a copy of the lease, option or other contract, and a written letter from the current property owner.

2.5.2 Applicant Responsibilities

The applicant shall be responsible for fulfilling the following responsibilities before a Site Plan Review Agreement will be executed.

1. The applicant shall submit a completed application via the City's online permitting system to the Planning Department along with the application fee, the Site Plan (see section 2.5.4 for plan specifications) and supporting documents and studies for review by the TAC. The number of hard copies required to be submitted shall be determined by the Planning Director.

2. After review of the application by the TAC, the applicant shall submit twelve (12) copies of the Site Plan (see section 2.5.4 for plan specifications) to the Planning Department including any revisions as requested by the TAC and supporting documents and studies.

3. The application shall be fully executed and signed, and shall provide evidence of ownership or legal authorization to represent the landowner.

4. The application shall be complete as submitted and provide adequate information for evaluation of the proposed site development.

5. The applicant shall pay any application fees and costs of advertising and providing notice to abutters.

6. The applicant shall appear and present the Site Plan before the TAC and also at the public hearing before the Planning Board.

7. The applicant shall provide technical information and expertise sufficient for evaluation of the application.

8. All application documents, plans, supporting documentation and other materials shall also be provided in digital Portable Document Format (PDF). Digital files shall be complete and exact copies of the corresponding paper submittals (e.g., plans shall be at the same scale and sheet size as the paper copies). Applicants may submit additional digital files to assist in presentations at public hearings.

2.5.3 Site Plan Review Application Required Information

1. The following information shall be submitted with the Site Plan Review application:

   (a) Complete form entitled "Site Plan Application Checklist".

   (b) Detailed statement that lists and describes "green" building components and systems, including, but not limited to, whether the project is certifiable as demonstrated by a completed LEED (Leadership in Energy and Environmental Design) checklist. For example, building orientation, HVAC efficiencies, reductions in water usage, landscaping, source of building materials, production of on-site electricity, on-site rainwater recovery systems, energy efficient lighting, "cool" roof products, "green" refrigerant and plumbing systems, and energy efficient windows.

   (c) Existing and proposed gross floor area and dimensions of all buildings and statement of uses and floor area for each floor.

   (d) Tax map and lot number, and current zoning of all parcels under Site Plan Review.

   (e) Owner's name, address, telephone number, and signature. Name, address, and telephone number of applicant if different from owner.

   (f) Names and addresses (including Tax Map and Lot number and zoning districts) of all direct abutting property owners (including properties located across abutting streets) and holders of existing conservation,

preservation or agricultural preservation restrictions affecting the subject property.

(g) Names, addresses and telephone numbers of all professionals involved in the site plan design.

(h) List of reference plans.

(i) List of names and contact information of all public or private utilities servicing the site.

2. As part of final approval of the site plan by the Planning Board, the applicant shall submit the following.

(a) All local approvals, permits, easements and licenses required, including but not limited to:

- Waivers;
- Driveway permits;
- Special exceptions;
- Variances granted;
- Easements;
- Licenses.

(b) Any exhibits, data, reports or studies that may have been required as part of the approval process, including but not limited to:

- Calculations relating to stormwater runoff;
- Information on composition and quantity of water demand and wastewater generated;
- Information on air, water or land pollutants to be discharged, including standards, quantity, treatment and/or controls;
- Estimates of traffic generation and counts pre- and post-construction;
- Estimates of noise generation;
- A Stormwater Management and Erosion Control Plan;
- Endangered species and archaeological / historical studies;
- Wetland and water body (coastal and inland) delineations;
- Environmental impact studies.

(c) Amendments and any conditions for final Site Plan approval as modified from the original Site Plan Review application submittal. These should be annotated and highlighted on the final site plan in the index and on each affected plan sheet.

(d) A document from each of the required private utility service providers indicating approval of the proposed site plan and indicating an ability to provide all required private utilities to the site.

(e) A list of any required state and federal permit applications required for the project and the status of same.

(f) For site plans that involve land designated as "Special Flood Hazard Areas" (SFHA) by the National Flood Insurance Program (NFIP) confirmation that all necessary permits have been received from those governmental agencies from which approval is required by Federal or State law, including Section 404 of the Federal Water Pollution Control Act Amendments of 1972, 33 U.S.C. 1334.

2.5.4 Site Plan Specifications and Required Exhibits and Data

1. Plan sheets submitted as part of the Site Plan Review application process shall meet the following specifications:

   (a) Full size plans shall not be larger than 22 inches by 34 inches with match lines as required, unless approved by the Planning Director;

   (b) Scale: Not less than 1 inch = 60 feet and a graphic bar scale shall be included on all plans;

   (c) GIS data should be referenced to the coordinate system New Hampshire State Plane, NAD83 (1996), with units in feet;

   (d) Plans shall be drawn to scale and shall be prepared and stamped by a NH licensed civil engineer;

   (e) Wetlands shall be delineated by a NH certified wetlands scientist and so stamped.

2. The following information is required on all sheets of the plan set submitted as part of the application process:

   (a) Title (name of development project), north point, scale, legend;

   (b) Date plans first submitted and the date and explanation of all revisions;

   (c) Individual plan sheet title that clearly describes the information that is displayed;

   (d) Source and date of data displayed on the plan;

(e) A note shall be provided on the Site Plan stating: "All conditions on this Plan shall remain in effect in perpetuity pursuant to the requirements of the Site Plan Review Regulations."

3. Plans displaying the following information shall be submitted as part of the Site Plan Review application process. Where possible, the information on each plan should be grouped according to the review standards outlined in Articles 3 through 11 of these regulations.

(a) Existing Conditions

- Surveyed plan of the site showing existing natural and built features.
- Existing building footprints and gross floor area.
- Existing parking areas and number of parking spaces provided.
- Zoning district boundaries.
- Existing, required, and proposed dimensional zoning requirements including building and open space coverage, yards and/or setbacks, and dwelling units per acre.
- Existing impervious and disturbed areas.
- Limits and type of existing vegetation.
- Wetland delineation, wetland function and value assessment (including vernal pools).
- Special Flood Hazard Areas (SFHA), the 100-year flood elevation line, and Base Flood Elevation (BFE) data, as required.

(b) Buildings and Structures

- Plan view of all buildings and/or structures indicating their use, size, dimensions, location and first floor elevation, footings, overhangs and snow dams.
- Elevations of building(s) indicating their height, massing, placement, materials, lighting and façade treatments.
- Total floor area.
- Number of usable floors.
- Gross floor area by floor and use.

(c) Access and Circulation

- The location and width of accessways within the site.
- The location of curbing, rights-of-way, edge of pavement and sidewalks.
- The location, type, size and design of proposed traffic signing and traffic signal equipment including conduits and pavement markings on and off-site.
- Names and layout of existing abutting streets (including paper streets).

- Driveway curb cuts for abutting properties and for any adjacent properties that front on public roads that provide access to the site.
- If a subdivision, then right-of-way lines and names of all proposed streets, accessways, lanes, right-of-ways or easements and licenses intended to be dedicated for public use.
- Use current AASHTO truck turning templates descriptions with the minimum vehicle allowed being a WB-50, unless otherwise approved by the TAC.

(d) Parking and Loading

- The location of off-street parking and loading areas with the layout of the parking spaces and landscaped areas and buffers.
- Parking calculations showing number required and number provided.

(e) Water Infrastructure

- The size, type, and proposed location of water mains, shut-offs, hydrants, gate boxes, valves, and other water facilities with all necessary engineering data.
- Location of water wells and monitoring wells including protective radii and reserve areas and distance to seasonal high water.

(f) Sewer Infrastructure

- The size, type and proposed location of sanitary sewage facilities with all necessary engineering data including any onsite temporary facilities during construction period.

(g) Utilities

- The size, type, and location of all above ground and underground public service connections and private service connections; including gas lines, power lines, telephone lines, other communication lines and fire alarm connections.
- Size, type, and location of generator pads, transformers, pad mounted condensers, and other electrical or mechanical bases or fixtures.

(h) Solid Waste Facilities

- The size, type, and location of solid waste disposal facilities.

(i) Stormwater Management

- The location, elevation, and layout of surface and subsurface stormwater drainage system features including design and sizing details for proposed stormwater treatment measures.

- Location of any onsite snow storage areas and/or proposed off-site snow removal provisions.
- Locations and containment measures for any salt storage facilities, if applicable.
- Location of proposed temporary and permanent material storage locations and distance from wetlands, water bodies, and stormwater structures.

(j) Outdoor Lighting
- The type and placement of outdoor lighting fixtures for the exterior of the buildings, parking areas, and any other areas of the site, and photometric plan.

(k) Landscaping
- Landscaping plan identifying dimensions of the undisturbed area, existing vegetation, all vegetation to be retained, and measures used to protect natural features to be retained.
- Location of any landscaping irrigation systems and water source.

(l) Contours and Elevations
- Existing and proposed contours (2-foot minimum) and finished grade elevations.

(m) Open Space
- Type, extent, and location of existing and proposed open space.

(n) All easements, deed restrictions and non-public rights of ways.

(o) Any other information that the TAC or the Planning Board may require in order to adequately evaluate the proposed development.

(p) For sites within a Character District or Civic District, the following additional information shall be included in the plan set:
- Applicable building height standards (Zoning Ordinance, Sec. 10.5A21.20 and 10.5A43.30, and Regulating Plan) and proposed building height.
- Applicable special requirements (Zoning Ordinance, Sec. 10.5A21.30 and Regulating Plan), if any, and demonstration of compliance.
- Proposed building form and building type (Zoning Ordinance, Sec. 10.5A43).
- Proposed community space, if applicable (Zoning Ordinance, Sec. 10.5A46).

(q) For sites that involve land designated as "Special Flood Hazard Areas" (SFHA) by the National Flood Insurance Program (NFIP), the site plan set shall include sufficient evidence (construction drawings, grading and land treatment plans) so as to allow a determination that:

(i) The proposed development is consistent with the need to minimize flood damage;
(ii) All public utilities and facilities, such as sewer, gas, electrical and water systems, are located and construction to minimize or eliminate flood damage; and
(iii) Adequate drainage is provided so as to reduce exposure to flood hazards.

4. For any of the Site Plan Review requirements listed above or as detailed in Articles 3 through 11 of these regulations, the applicant shall submit either the requested information or request a waiver from the Planning Board according to the requirements of Section 2.10 of these regulations.

Section 2.6 Referrals to City Departments

The Planning Director shall refer applications to other City departments as follows:

1. Applications that involve proposed food service establishments shall be referred to the Health Department.

2. Applications that involve the creation of new dwelling units shall be referred to the School Department

Section 2.7 Public Hearing

1. A public hearing by the TAC will be held for all Site Plan Review applications.

2. Within thirty (30) days of receipt of a recommendation from the TAC, the Planning Board shall place the application on its agenda for a public hearing.

3. In accordance with NH State Law, the following parties shall be given at least ten (10) days' notice of the public hearing at which Site Plan Review will occur:

(a) Direct abutters;

(b) Holders of conservation, preservation or agricultural preservation restrictions on the property.

4. The general public shall be notified by posting a copy of the written notice at least ten (10) days in advance of the public hearing at two public places and by printing a notice in a newspaper of general circulation.

5. Notices shall include a general description of the proposed development, the name of the applicant, the location of the property which is to be developed and the time, date and place of the meeting or public hearing.

6. When computing the period for notification, the day of mailing, posting or publication and the day of the meeting shall not be counted.

7. All costs of notice, whether mailed, posted or published, shall be paid by the applicant.

8. At the public hearing, any applicant, abutter, or individual may testify in person or in writing.

9. The Planning Board may deny an application for Site Plan Review without a public hearing, based upon failure of the applicant to supply information required by these regulations, failure to meet deadlines established by the Planning Board, or failure to pay costs of the notice or other fees required by the Planning Board.

Section 2.8 Determination of Application Completeness

1. Upon submission of a formal application for Site Plan Review, the Planning Board shall hold a public hearing on the application, with notice to abutters and the public as required by State statute, and shall determine if the application is complete according to these Regulations and shall vote upon its acceptance.

2. If the Board determines that a submitted application is incomplete according to these Regulations, the Board shall notify the applicant of the determination in accordance with RSA 676:3, which shall describe the information, procedure, or other requirement necessary for the application to be complete.

3. Upon determination by the Board that a submitted application is complete according to these Regulations, the Board shall begin formal consideration and shall act to approve, conditionally approve, or disapprove within 65 days, subject to extension or waiver as provided by State statute.

Section 2.9 Evaluation Criteria

In order to grant site plan review approval, the TAC and the Planning Board shall find that the application satisfies evaluation criteria pursuant to NH State Law and listed herein. In making a finding, the TAC and the Planning Board shall consider all standards provided in Articles 3 through 11 of these regulations.

1. Compliance with all City Ordinances and Codes and these regulations.

2. Provision for the safe development, change or expansion of use of the site.

3. Adequate erosion control and stormwater management practices and other mitigative measures, if needed, to prevent adverse effects on downstream water quality and flooding of the property or that of another.

4. Adequate protection for the quality of groundwater.

5. Adequate and reliable water supply sources.

6. Adequate and reliable sewage disposal facilities, lines, and connections.

7. Absence of undesirable and preventable elements of pollution such as smoke, soot, particulates, odor, wastewater, stormwater, sedimentation or any other discharge into the environment which might prove harmful to persons, structures, or adjacent properties.

8. Adequate provision for fire safety, prevention and control.

9. Adequate protection of natural features such as, but not limited to, wetlands.

10. Adequate protection of historical features on the site.

11. Adequate management of the volume and flow of traffic on the site and adequate traffic controls to protect public safety and prevent traffic congestion.

12. Adequate traffic controls and traffic management measures to prevent an unacceptable increase in safety hazards and traffic congestion off-site.

13. Adequate insulation from external noise sources.

14. Existing municipal solid waste disposal, police, emergency medical, and other municipal services and facilities adequate to handle any new demands on infrastructure or services created by the project.

15. Provision of usable and functional open spaces of adequate proportions, including needed recreational facilities that can reasonably be provided on the site.

16. Adequate layout and coordination of on-site accessways and sidewalks in relationship to off-site existing or planned streets, accessways, bicycle paths, and sidewalks.

17. Demonstration that the land indicated on plans submitted with the application shall be of such character that it can be used for building purposes without danger to health.

18. Adequate quantities, type or arrangement of landscaping and open space for the provision of visual, noise and air pollution buffers.

19. Compliance with applicable City approved design standards.

Section 2.10 Waiver Requests

1. When the Planning Board finds by a vote of six members that a waiver will not have the effect of nullifying the spirit and intent of the City's Master Plan or these regulations, it may grant a waiver following a written request by the Applicant.

2. In granting waivers the Planning Board may require such conditions as will in its judgment secure the objectives of the regulations.

Section 2.11 Approval Procedures

1. Recommendations of the TAC for approval shall require a majority of those present and voting. Five voting members shall constitute a quorum for the transaction of business.

2. Once the TAC has made a recommendation to the Planning Board and a public hearing has been held, final approval shall require a vote by the majority of those Planning Board members present and voting.

3. If the TAC or the Planning Board determines that the proposed site plan does not meet all of the applicable requirements, the TAC or the Planning Board shall vote to disapprove the plan.

4. The reasons for disapproval will be clearly stated in the Planning Board's records and shall be communicated to the applicant in writing.

5. Approval of the site plan shall not be effective until a site plan agreement has been signed (see Section 2.12) and the applicable sheets of the site plan

have been recorded at the Rockingham County Registry of Deeds (see Section 2.13).

Section 2.12 Site Plan Review Agreement

1. A Site Plan Review Agreement to ensure the site is developed in accordance with the approved plan shall be drafted for all approved site plans. Terms and conditions of the Site Plan Review Agreement shall indicate any stipulation or condition which may be necessary to secure the public health, safety, and welfare and insure compliance with all of the ordinances of the City of Portsmouth, all applicable state and local regulations, and requirements of the Building Code to insure that all site development and construction is completed according to the Plan approved. A security shall be provided in a form and amount approved by the City.

2. The Site Plan Review Agreement shall be considered fully executed when the Agreement has been endorsed by the owner of the property and the Planning Director, and when the security has been approved by the City Attorney and placed on file with the Planning Department.

Section 2.13 Recording of Site Plans

1. An approved site plan shall be signed by the Planning Board Chairperson (or designee) and shall be recorded at the Rockingham County Registry of Deeds (RCRD). Site plans are not valid until recorded at the Registry of Deeds.

   (a) For the purpose of this requirement, only those sheets in the approved plan set which are intended to show the layout and arrangement of on-site vehicular and pedestrian circulation, off-street parking, and/or landscaping and screening shall typically be required to be recorded.

   (b) Notwithstanding the above, the Planning Board may require the recording of additional plan sheets or supporting documentation if the Board determines that such recording is necessary to ensure continued compliance with the conditions shown on the plans. Examples include plans showing specific measures designed to protect wetlands or manage stormwater.

2. The applicant shall submit to the Planning Department the following:

   (a) One (1) hard copy and one (1) electronic file uploaded to the City's online permitting system of the final site plan incorporating any changes that have been required as a condition of the Planning Board vote;

(b) One original Mylar of the sheets from the final site plan that are required to be recorded at the RCRD.

3. The plan sheet(s) submitted for recording shall include the following notes:

"1. This Site Plan shall be recorded in the Rockingham County Registry of Deeds.
2. All improvements shown on this Site Plan shall be constructed and maintained in accordance with the Plan by the property owner and all future property owners. No changes shall be made to this Site Plan without the express approval of the Portsmouth Planning Director."

4. An amended site plan shall be recorded at the RCRD as above, provided that in the case of a plan amendment that is granted approval by the Planning Director or TAC without a hearing before the Planning Board, the recording of a notice of approval shall be sufficient unless otherwise determined by the Planning Director.

5. The applicant shall have the required site plans pre-approved by the Registry of Deeds prior to submitting mylars to the Planning Department for signature and recording.

Section 2.14 Approval Expiration and Extension

1. Site plan approval by the Planning Board shall expire unless used (obtain a Building Permit) within a period of one (1) year from the date granted.

2. The Planning Board may, for good cause shown, extend such period by as much as one (1) year if requested and acted upon prior to the expiration date.

3. If additional one (1) year extensions are requested, the owner will be required to have the previously approved plans reviewed by the TAC and the Planning Board. For this review the owner shall provide to the Planning Department the previously approved plans and supporting data.

4. Upon review of a request for an extension, the Planning Board shall have the authority to amend or deny a previously approved application. This review shall not require an application fee; however, the Planning Board and/or TAC may, if deemed necessary by either chair, conduct a public hearing at the owner's expense.

5. A time extension shall be granted if determined that no change has taken place that would materially affect the currently approved site plan in regard to:

   (a) Traffic flow, volume, or congestion;
   (b) Pedestrian safety;
   (c) Drainage;
   (d) Water availability;
   (e) Sewer capacity;
   (f) Design standards;
   (g) Landscape elements; and
   (h) Zoning compliance.

6. The Planning Board shall not deny a request for an extension without first having held a public hearing.

Section 2.15 Post Approval Procedures

2.15.1 Amendments

After approval of the site plan the owner may request, in writing, approval of minor amendments. The Planning Director may approve the amendment in writing or may require review by the TAC or the Planning Board.

2.15.2 Landscape Markings

Once a site plan has been approved and prior to the signing of the Site Plan Review Agreement, the applicant shall tag or otherwise identify at the site all vegetation and natural features to be retained as shown on the approved site plan.

2.15.3 Construction Management and Mitigation Plan

1. The Planning Board, as a condition of approval, may require a Construction Management and Mitigation Plan (CMMP). If such a plan is required, no site work is authorized nor shall work commence before the Plan has been accepted and approved as to content and form by the City.

2. If the Planning Board requires completion of a CMMP all activities on the site shall be in full compliance with the CMMP.

2.15.4 Recording of Plans and Documents

Once a site plan has been approved and prior to the signing of the Site Plan Review Agreement, owner shall submit to the Planning Director documents showing all easements, licenses, rights-of-way, and maintenance agreements in a recordable format.

2.15.5 Submittal of a Land Use Development Tracking Form

The Applicant or its engineer shall submit a copy of a completed Land Use Development Tracking Form using the Pollutant Tracking and Accounting Program (PTAP) online portal currently managed by the UNH Stormwater Center or similar form approved by the City.

Section 2.16 Project Inspection and Completion

2.16.1 Compliance and Enforcement

During construction and upon completion of the project, the Planning Board may require routine inspections to insure compliance with the approved site plan. Such inspections shall be performed by an oversight engineer or other licensed or certified professional at the expense of the applicant.

2.16.2 Final Inspection

1. Prior to the completion of the project, the applicant shall notify the Planning Director that the project is ready for final inspection.
2. All stormwater detention and/or treatment devices constructed onsite shall be certified by a qualified engineer as being built in accordance with approved site plans with a letter of certification submitted to the City Engineer.

2.16.3 As-Built Plan

1. At the completion of the project, the applicant shall submit to the Planning Director an "as-built plan" which shall include all surface and subsurface features, easements, licenses, rights-of-way, and maintenance agreements. The plan shall be prepared and stamped by a New Hampshire licensed land surveyor.

2. The applicant shall provide a digital version of the as-built plan. The purpose of the digital plan is to aid in updating the City's geographic information system (GIS). The City respects the copyright interests of the applicant's representatives and requires only factual, not expressive, data. The digital plan shall meet the requirements outlined in Attachment A.

3. The Planning Director may waive the requirement for an as-built plan.

2.16.4 Release of Performance Security

1. The Planning Director and City Attorney may order release of the performance security only after receipt of the Building Inspector's Certificate

of Occupancy, the as-built plan, final inspections and completion of all required conditions of approval as required by the Planning Board.

2. If necessary, the Planning Director and City Attorney may order a partial release of the performance security, but no more than one partial release shall be permitted.

2.16.5 Long-Term Maintenance

The property owner shall maintain the property to comply with the approved site plan and shall fulfill all reporting requirements stipulated in the site plan review approval.

Section 2.17 Exemption of Approved Site Plan from Changes in Land Use Regulations

1. Under State statute (RSA 674:39), approved site plans are protected from future changes in regulations and ordinances as follows:

   (a) A site plan that has been approved by the Planning Board shall be exempt from all subsequent changes in site plan regulations and zoning ordinances (except those regulations and ordinances which expressly protect public health standards, such as water quality and sewage treatment requirements) for a period of 4 years after the date of approval of the site plan by the Planning Board, provided that:

      (1) Active and substantial development or building has begun on the site by the owner or the owner's successor in interest in accordance with the approved plans within 12 months after the date of approval, or in accordance with the terms of the approval, and any required site plan security is provided to the City at the time of commencement of such development; and

      (2) The development remains in full compliance with the public health regulations and ordinances of the City of Portsmouth; and

      (3) At the time of approval, the site plan conforms to the site plan regulations and zoning ordinances then in effect at the site of such plan.

   (b) Once substantial completion of the improvements as shown on the site plans has occurred in compliance with the approved site plans or the terms of said approval, or unless otherwise stipulated by the Planning Board, no subsequent changes in these Site Plan Review Regulations or the Zoning Ordinance shall operate to affect such improvements.

2. In the absence of a specific finding by the Planning Board, the following terms are defined for the purpose of determining exempting a project from subsequent amendments to local land use regulations:

   (a) "Active and substantial development or building" shall mean the completion of all of the following in accordance with the approved plans:

      (1) Installation and maintenance of erosion control measures; and
      (2) Construction of all drainage improvements to service the development, including all detention/retention basins, treatment swales, pipes, underdrains, catch basins, etc.; and
      (3) Construction of all roadways, accessways, etc. to a minimum of gravel base; and
      (4) Construction and/or installation of all utilities ready for connection to proposed buildings and structures; and
      (5) Construction of at least one building foundation or 20% of the total building foundations on the site, whichever is greater; and
      (6) Review and approval of items (1) through (5) by the Department of Public Works or designated agent.

      Site clearing, excavation or earth movement without completion of items (1) through (6) above shall not be considered "active and substantial development." A plan approved in phases shall be subject to this definition only for the phase currently being developed.

2. "Substantial completion of the improvements as shown on the site plan" is defined as the establishment of all on-site and off-site improvements specified in the site plan approval, except for those improvements which are specifically deferred by recorded vote of the Planning Board prior to the expiration of the four (4) year period specified in RSA 674:39. To the extent that the Planning Board calls a bond or other security for such improvements and the funds are paid to the City, substantial completion of the improvements in the subdivision shall be deemed to have occurred.

Article 3 Vehicular Circulation Standards

Section 3.1 General Provisions

1. All site development shall be designed and constructed to consider the safety, interests and convenience of all users – drivers, bicyclists, transit users and pedestrians of all ages and abilities.

2. All site plans shall portray the design of every element of vehicular circulation that provides access in and around the site, unless otherwise specified. The Planning Board may require that work involving areas of special sensitivity or significance be conducted by a traffic engineer licensed in New Hampshire.

Section 3.2 Off-Site Impacts

1. The applicant is responsible for assessing the impact of the proposed development on traffic patterns and vehicular circulation systems. The TAC and/or the Planning Board may require that a traffic study be performed and that a technical expert may be hired to review any traffic analysis performed by the applicant.

2. A traffic impact analysis shall be prepared by a professional engineer licensed in New Hampshire and experienced and qualified in traffic engineering, and shall contain the following information:

   (a) Existing traffic conditions on streets and intersections adjacent to the site, including daily and peak-hour traffic volumes, seasonally adjusted as determined by the TAC;

   (b) Projected traffic conditions on adjacent streets for the design year of occupancy and for the tenth year following occupancy or such longer period as the TAC or Planning Board determines applicable based on the scale of the project;

   (c) Projected impacts of the proposed development including:

      - total daily and peak-hour traffic entering and exiting the site
      - turning movements
      - estimates of induced vs. pass-by trips;

   (d) A proposed plan to mitigate the projected impacts of the development.

3. Projects shall be designed to maintain, and where possible enhance, the quality of vehicular, bicycle and pedestrian circulation and safety on affected public streets.

4. The applicant shall provide traffic signal equipment, traffic signs, travel lanes, pavement widening, markings, sidewalks, and other improvements to existing streets upon determination by the Planning Board that the specific improvements are necessary for safe handling of traffic generated by the proposed development.

5. Projects having access onto congested public streets may be required to eliminate certain turning movements as determined necessary and practical by the Planning Board.

Section 3.3 General Accessway and Driveway Design

3.3.1 General Requirements

1. The internal network of accessways and driveways shall:

   (a) Provide for the safe, efficient and orderly movement of all modes of transportation, including vehicles, public transit, bikes and pedestrians;

   (b) Be designed to meet, but not exceed, the needs of the present and projected population served by the site, and;

   (c) Be designed to respect natural features and topography.

2. Accessways shall be designed based on the anticipated role within the project site of the accessway as defined by AASHTO road classifications and/or approved by the Planning Board.

3. A driveway permit from the Department of Public Works shall be required for all existing and new driveways accessing a street.

3.3.2 Accessway and Driveway Design and Location

1. Accessways and driveways shall, where practical, have an all-season safe sight distance (according to AASHTO standards) in both directions along the public street. Where only a lesser sight distance is obtainable, no more than one accessway per single parcel shall be allowed.

2. Accessways and driveways shall be located no closer than fifty (50) feet to the curb line of an intersecting street.

3. Driveways shall be limited to one per lot.

3.3.3 Travel Lanes

Where multiple travel lanes are required, planted medians (designed in accordance with the landscaping standards in Article 6 herein) may be required at the discretion of the Planning Board to reduce the visual impact of pavement.

3.3.4 Shared Access

Shared driveways are encouraged and may be permitted between adjacent lots. In such cases, a joint access easement between the property owners may be required.

Section 3.4 Curbing

Granite curbing shall be installed per the Department of Public Works specifications in all of the following situations:

(a) Where accessways and driveways meet public streets;

(b) Where curbing is necessary to channelize surface drainage; and

(c) Where otherwise required by the Planning Board.

Section 3.5 Traffic Calming and Connections

1. Internal accessway networks shall be designed to optimize public safety.

2. Traffic measures shall be implemented to support the overall interconnectedness and coherence of the City's public street system.

Section 3.6 Drive-Through Facilities

3.6.1 Site Access and Circulation Standards

1. The internal entrance into the drive-through lane shall not conflict with the general access to the site.

2. The distance from any transaction window to the site exit shall be a minimum of sixty (60) feet.

3. Where a turn in the drive-through lane is required between a transaction window and the site exit, the distance from the transaction window to the beginning of the turn shall be a minimum of forty (40) feet with an internal minimum turning radius of seventeen (17) feet.

3.6.2 Stacking Lanes and Spaces

1. Stacking lanes shall be provided to prevent circulation congestion and conflicts, both within the site and on adjacent public streets. Stacking lanes shall be designed to separate drive-through traffic from other vehicular and pedestrian circulation.

2. Stacking lanes shall not conflict with or impede vehicular or pedestrian circulation within the site, access into or out of parking spaces, or access into buildings; and shall not interfere with required loading and trash storage areas.

3. Stacking lanes shall be at least 10 feet wide and stacking spaces shall be at least 20 feet in length.

4. The applicant must demonstrate that the number of stacking lanes and spaces proposed are sufficient for the intended use.

5. A bypass lane at least 11 feet wide shall be provided in order to permit vehicles to exit the site without using the drive-through lane(s).

6. Stacking lanes (not including bypass lanes) shall be set back 15 feet from the property line fronting on any public way, 15 feet from any side or rear property lines which abut non-residential properties, and 20 feet from any side or rear property lines which abut residential property.

7. Stacking lanes shall be integrated with the onsite circulation pattern, and shall not enter directly from a public right-of-way.

8. Stacking lanes shall be distinguished from traffic aisles, other stacking lanes and parking areas with striping, curbing, landscaping or the use of alternative paving materials or medians.

9. The intersection of stacking lanes and walk-in customer access shall be a minimum of fifty (50) feet from site entrances and exits and from transaction windows. Said intersections shall be provided with crosswalks delineated by patterned or contrasting paving and striping and shall include warning signage aimed at both the pedestrian and vehicle.

3.6.3 Traffic Impact Study

A traffic impact analysis conforming to the standards in Section 3.2 shall be submitted with any site plan review application containing a drive-through facility.

3.6.4 Noise Reduction

Sound pressure levels created by devices in the drive-through facility, including but not limited to speakers, shall comply with the standards for noise control in the Zoning Ordinance. Methods of communicating to patrons that do not require the use of speakers shall be used where feasible or where required by the Planning Board.

3.6.5 Screening

1. Drive-through lanes, stacking spaces and bypass lanes that would be visible from a public right-of-way or from land in a Residential or Mixed Residential zoning district shall be screened from view to at least three feet above grade.

2. Screening shall be with brick or stone walls, berms, or equivalent structures approved by the Planning Board. Walls, berms and other screening structures shall be supplemented by plantings such as shrubs and trees.

3. Notwithstanding the above, drive-through facilities need not be screened from a public right-of-way if (a) the right-of-way is more than 100 feet from the drive-through facility and (b) the Planning Board determines that existing or proposed topography or landscaping will provide adequate visual relief and prevention of glare.

Section 3.7 Loading and Service Areas

3.7.1 Location

1. Loading and services areas shall not be located between the front property line and any building or structure nor in the required side yard or rear yard areas.

2. No off-street loading or maneuvering areas shall be nearer than 100 feet to any adjoining Residential or Mixed Residential Zoning Districts.

3. All such areas shall be screened in accordance with Article 6 of these regulations.

4. No off-street loading areas shall be a part of an area used to satisfy the off-street parking requirements of the Zoning Ordinance.

3.7.2 Design Standards

Loading areas and accessways to loading areas shall have a durable surface (whether pervious or impervious) that meets the load bearing capacity of the

project, minimizes dust, material tracking and erosion, and facilitates snow removal.

Section 3.8 Fire Lanes

1. Fire lanes shall be provided in accordance with the City's Emergency Lanes Ordinance.

2. Fire lanes may be required to be within 30 feet of a building if deemed necessary by the TAC. A minimum of 5 foot wide unobstructed pathway shall be provided through all barriers, including rows of parked cars.

3. Fire lane and access easements shall be provided to serve all buildings and any areas deemed necessary for emergency vehicle access.

4. Required "NO PARKING FIRE LANE" signs shall be 12 inches wide and 18 inches high. Signs shall be painted on a white background with letters and borders in red, using not less than 2 inches lettering. Signs shall be permanently affixed to a stationary post and the bottom of the sign shall be six (6) feet, six (6) inches above finished grade. Signs shall be spaced not more than one hundred (100) feet apart. Signs may be installed on permanent buildings or walls or as approved by the TAC.

5. Pavement marking lines shall be painted in red traffic paint, six (6) inches in width to show the boundaries of the fire lane. The words "NO PARKING FIRE LANE" shall appear in four (4) inch white letters at 25 feet intervals on the red border markings along both sides of the fire lanes.

6. Curb marking shall be painted in red traffic paint from the top seam of the curb to a point even with the driving surface. The words "NO PARKING FIRE LANE" shall appear in four (4) inch white letters at 25 feet intervals along the curb(s).

7. All fire lanes shall be maintained and kept in a good state of repair at all times by the owner.

Section 3.9 Mass Transit Facilities

Mass transit facilities shall be incorporated at the discretion of the Planning Board based on future transit system needs. Transit routes, access points and shelter locations shall be addressed along major streets or accessways within and on the perimeter of such projects. Transit facilities shall be provided in a manner to make transit an attractive mode of travel for both employees and patrons.

Article 4 Parking Area Standards

Section 4.1 Parking Provision

The number of parking spaces required, parking facility setbacks, and location of parking facilities shall be in accordance with the off street parking standards in the Zoning Ordinance.

Section 4.2 Requirements for Accessible Parking for the Physically Disabled

1. Specially designated parking spaces for the physically disabled shall be located closest to the designated accessible primary entrance(s).

2. If possible, these shall be located so that physically disabled persons do not have to cross vehicular travel lanes.

3. Ramps required as a means of egress leading from specially designated parking spaces for the physically disabled in parking lots shall be in conformity with Building Code.

4. Parking for the physically disabled shall comply at a minimum with the standards provided by *Accessible and Usable Buildings & Facilities* (ICC/ANSI A117.1 latest edition).

Section 4.3 Off-Street Parking Space Design and Layout

In addition to the requirements of the Zoning Ordinance, the following design standards shall apply.

1. Every effort shall be made to use pervious parking and pathway surfaces as an alternative to impervious asphalt or concrete for overflow parking areas, except in cases where it is determined that a traditional impervious parking lot with engineered stormwater systems renders greater protection of surface and groundwater resources than pervious pavement.

2. When provided, motorcycle parking pads shall be concrete.

Article 5 Pedestrian and Bicycle Circulation

Section 5.1 General Provisions

1. The site plan shall provide for a system of pedestrian or bicycle paths, or a combination of both, as appropriate to the type and scale of development. This system shall connect the major building entrances/exits, parking areas and any existing or proposed sidewalks within or adjacent to the project.

2. Any paths shall be located within the lot lines of the site, unless it is determined by the Planning Board that it would be more appropriate to locate these in the public right of way.

3. The system shall also be designed to link the project with residential, recreational, commercial facilities, schools, bus stops and existing bicycle or pedestrian facilities in the neighborhood.

4. The system shall minimize conflicts between pedestrians, bicycles and motor vehicles.

Section 5.2 Sidewalks and Pedestrian Pathways

5.2.1 Accessibility

Sidewalks and pedestrian pathways shall be easily accessible to all users, whatever their level of physical ability, and comply at a minimum with the standards provided by *Accessible and Usable Buildings & Facilities* (ICC/ANSI A117.1, latest edition).

5.2.2 Travel Width

The sidewalk or pedestrian pathway shall be at least five (5) feet wide. If anticipated pedestrian volumes warrant, the Planning Board may require a wider pathway.

5.2.3 Continuity

1. A sidewalk or pedestrian pathway shall connect destinations and shall not require pedestrians to travel out of their way unnecessarily.

2. Pedestrian areas shall be clearly distinguished from vehicular and bicycle traffic areas through the use of paving materials, landscaping buffers, or other means.

5.2.4 Location

At a minimum, sidewalks shall be located along the front of the site, along the front of buildings, and shall connect to building entrances.

5.2.5 Pedestrian Amenities

1. Sidewalks and pedestrian pathways longer than 500 feet shall provide areas for standing and sitting and may include pedestrian amenities such as benches, tables, shade trees or grassy areas.

2. Such pedestrian areas shall be a minimum of 100 square feet in area and shall be provided at regular intervals of 300 feet along the sidewalk or pedestrian pathway.

5.2.6 Surfacing Materials

Any off-site improvements to public sidewalks that are required as part of the project shall use surfacing materials specified by the Planning Board.

Section 5.3 Bicycle Facilities

5.3.1 General

1. Bicycle facilities (including routes and racks) may be combined with pedestrian facilities when designed according to shared path standards of AASHTO, but not on City sidewalks.

2. Bicycle facilities shall be designed in accordance with AASHTO, Guide for the Development of Bicycle Facilities, as amended.

5.3.2 Bicycle Routes

Bicycle routes may be required by the Planning Board in the form of a separate off-street path or on-street marked bicycle lanes.

5.3.3 Bicycle Racks

Bicycle racks, when required by the Planning Board, shall meet the following requirements:

(a) All racks shall be located in a convenient and secure location.

(b) Where bicycle racks are placed near trees, trees shall be protected with tree guards to prevent the securing of bicycles to trees.

(c) All racks shall be designed to allow the frame and one wheel to be locked to the rack with a high security, U-shaped shackle lock if both wheels are left on the bicycle.

(d) All racks shall be securely anchored to a durable, hard paved (preferably concrete) permanent surface.

Article 6 Landscaping and Screening Standards

Section 6.1 General Provisions

Landscaping shall be provided that:

(a) Defines areas for pedestrian and vehicular circulation;

(b) Breaks up the mass of buildings and impervious areas;

(c) Incorporates existing native vegetation and other natural features into the site design;

(d) Micromanages and controls stormwater at its source to minimize off-site impacts;

(e) Conserves water and reduces outside water use on the site;

(f) Provides buffers between incompatible land-uses or sites;

(g) Softens architectural and structural materials;

(h) Minimizes the need for fertilizer and pesticide usage and the introduction of pollutants to the environment.

Section 6.2 Landscaping Plan

1. A landscaping plan shall be submitted with each application for Site Plan Review showing:

   (a) Existing and proposed vegetation including trees, shrubs and plant beds including all vegetation that shall be retained as required by the Planning Board;

   (b) Dimensions of undisturbed areas and measures that shall be used to protect during construction existing natural features that are to be retained;

   (c) Location of all utilities above ground and below ground and related easements;

   (d) Required front, side, and rear yards.

2. A plant schedule shall accompany the plan that includes the following information:

   (a) Botanical and common names;

   (b) Planting size and size at maturity;

   (c) Quantity;

   (d) Growth habits (branching, crown spread, root spread);

   (e) Tolerance to urban conditions including road salt, soil; compaction, drought, heat, and air pollution;

   (f) Planting requirements.

Section 6.3 General Requirements

1. Areas not occupied by buildings or other structures, parking, loading, and accessways shall be landscaped to provide visual relief from expanses of paving and buildings while providing shade and stormwater management benefits.

2. At a minimum, all yards, setbacks, and areas of open space as required by the Zoning Ordinance shall retain existing natural features or be landscaped as required herein.

3. Landscaped areas shall consist of a combination of grass, flowers, vines, groundcovers, trees and/or shrubs. All planting areas shall be landscaped with a combination of climate tolerant plant material and protective groundcover. Bare soil is not permitted. Managed lawn areas should be kept to a minimum to the extent practical especially areas that will not be accessed and where alternative options are available.

4. Natural features, existing healthy mature trees, and other existing vegetation shall be identified on the landscaping plan and shall be retained when required by the Planning Board.

5. Existing invasive plant species shall be removed and destroyed if required by the Planning Board. Applicants shall refer to the *Prohibited Invasive Plant Species List* maintained by the NH Department of Agriculture.

6. No loam or other topsoil shall be removed from the site as part of site development. Topsoil shall be appropriately stockpiled and stabilized for redistribution within new planting areas.

7. Existing topography shall be maintained unless otherwise permitted by the Planning Board.

8. Any areas disturbed during construction that will not be occupied by buildings or other structures, parking, loading, and accessways shall be replaced with a minimum of 6 inches of suitable topsoil that meets the specifications of the City of Portsmouth DPW and then shall be replanted according to the requirements herein.

9. Plant material and landscape maintenance procedures that incorporate water conservation techniques are preferred.

10. All local and state requirements for yards and sight distance shall take precedence for selection and placement of landscaping features, as applicable.

11. No plantings shall be placed where they may impede or interfere with existing or proposed sewer, water, natural gas lines, or power lines.

12. The front yard landscaping area may contain any of the following:

    (a) Public utility easements and open surface drainage easements that do not occupy more than thirty (30) percent of the required landscaped area. Such areas should be planted with perennials or groundcover so as not to interfere with utility connections;

    (b) Underground utility connections and transformers, provided that they do not encroach more than five (5) feet into the required landscaped area. Such equipment shall be landscaped to soften the visual impact.

13. Wherever appropriate, applicants shall incorporate Low Impact Development (LID) design practices and technologies in all aspects of the site's landscaping.

14. Topsoil applied on the site shall be a mixture of ¾ loam and ¼ compost and shall comply with the specifications of the City of Portsmouth DPW as provided in Attachment B of these Site Plan Review Regulations (as amended).

Section 6.4 Planting Requirements

The purpose of planting requirements is to enhance the long-term survival prospects of the plant materials used in site landscaping. These standards are also meant to ensure that the benefits of site landscaping (buffering, aesthetic enhancement, erosion control, etc.) are realized as early after planting as possible.

At a minimum, all plantings shall be planted consistent with the *ANSI A300 Part 6 Standard Practices for Planting and Transplanting* (as amended).

In addition, the following planting standards shall apply:

(a). All planting holes shall be dug by hand. The only exceptions are for new construction where new planting pits, planting beds with granite curbing, and planting sites with Silva Cells (or equivalent) are being created. If a machine is used to dig in any of these situations and planting depth needs to be raised, the material in the bottom of the planting hole must be firmed with machine to prevent sinking of the root ball.

(b). Wire and burlap coverings shall be removed from the root ball and planting hole prior to planting.

(c). The root ball of the tree shall be worked so that the root collar of the tree is visible and no girdling roots are present.

(d). The root collar of the tree shall be 2”-3” above grade of planting hole for finished depth.

(e). All plantings shall be backfilled with soil from the site and amended no more than 20% with organic compost. The only exceptions are new construction where engineered soil is being used in conjunction with Silva Cells (or equivalent) and where new planting beds are being created.

(f). All plantings shall be backfilled in three lifts and all lifts shall be watered so the planting will be set and free of air pockets.

(g). An earth berm shall be placed around the perimeter of the planting hole except where curbed planting beds or pits are being used.

(h). 2”-3” of mulch shall be placed over the planting area.

(i). At the time the planting is complete the planting shall receive additional water to ensure complete hydration of the roots, backfill material and mulch layer.

(j). Stakes and guys shall be used where appropriate and/or necessary. Guy material shall be non-damaging to the tree.

(k). All planting stock shall be specimen quality, free of defects, and disease or injury. The City reserves the right to refuse/reject any plant material or planting action that fails to meet the standards and practices contained herein.

(l) When appropriate for trees placed within sidewalks, tree grates shall be used to prevent excessive soil compaction and to add interest to the pavement. Tree grates shall be fabricated of a strong, durable material, installed flush with grade, and provide an expandable center opening to allow for continued tree growth.

(m) Where applicable, tree guards shall be installed to protect the base of the tree from street activity.

(n) Tree wells over 6 inches deep or other landscape features that have the potential to present a falling hazard to the public shall have grates, fences or other protective measures installed.

(o) All trees where required shall be welled and protected against change of grade.

(p) Where appropriate a tree protection plan meeting the specifications of the City of Portsmouth may be required by the City to protect trees at risk from damage during construction.

Section 6.5 Plant Selection

1. All proposed plantings shall be appropriate for the soils, weather and environmental conditions of the site. Particular attention shall be paid to tolerance to potential road salt and other deicing treatments.

2. Plant materials shall be of specimen quality conforming to the American Standards for Nursery Stock and shall be guaranteed for at least two growing seasons.

3. Plants on the *Prohibited Invasive Plant Species List* maintained by the NH Department of Agriculture shall not be planted.

4. Trees shall be selected for growing habits that are appropriate for the location. Consideration shall be given to crown height and canopy spread at maturity so as not to interfere with buildings, structures, pedestrian and bicycle facilities, or other site features.

Section 6.6 Landscaped Areas

1. Side slopes for all landscaped areas shall not exceed thirty-three (33) percent (3:1 slope), and shall be appropriately stabilized with vegetation.

2. Within parking areas, landscaped islands shall be provided between adjacent rows of parking and between groups of parking spaces with the goal of breaking up large contiguously paved areas.

3. Landscaped islands shall be a minimum of nine (9) feet wide or as necessary to provide adequate room for growth and so as not to interfere with access to vehicles, lines of sight, pedestrian travel, or the long-term health of the vegetation.

4. Landscaped areas shall consist of a combination of large and small trees, shrubs, perennial and/or annual flowers, and groundcover. Managed turf areas should be kept to a minimum to reduce mowing and fertilizer needs.

5. Landscaped areas shall be designed with a variety of plant species that provide seasonal variety.

6. Landscaping around building entrances, near parking spaces, and along pedestrian and bicycle ways shall not interfere or block line of sight, restrict travel, or present a hazard to personal property.

7. Any landscaping located within the safe site distance of a driveway entryway, as defined by AASHTO standards, shall be no more than 3 feet at mature height.

8. Areas between trees and shrubs shall be planted with groundcover spaced to cover the area within 3 years. Areas of exposed bare soil shall be avoided. Mulch shall not be considered a groundcover.

9. Pedestrian pathways made of permeable materials are encouraged where landscaping areas are of a size and shape to accommodate pedestrian passage.

10. Low Impact Development techniques such as rain gardens, bioretention areas, and tree boxes and other stormwater management landscaping techniques may be incorporated into landscaped areas and may replace required landscaping components as approved by the Planning Board.

Section 6.7 Landscaping Along Public Rights of Way

1. Where feasible or as required by the Planning Board, street trees may be planted along public rights-of-way with the goal of providing a tree-lined street.

2. Trees shall be spaced at a minimum of 1 tree per 30 lineal feet or farther apart if necessary to accommodate the mature crown spread of the tree.

Trees shall not interfere with buildings, overhead utilities, pedestrian travel, or access to on-street parking spaces.

3. In the Gateway District, the front yard shall include a landscaped buffer strip with a depth of at least one-third of the distance between the street right-of-way and any building, and extending across the width of the lot except for driveways, sidewalks and bicycle paths. The buffer strip shall be in addition to the street trees required herein, and shall include a combination of trees and lower-level elements such as shrubs, hedges, fences, planted berms, or brick or stone walls.

Section 6.8 Perimeter Landscaping

1. Parking areas shall be landscaped on the perimeter in order to soften the visual impact of the parking area while maintaining clear sight lines.

2. Landscaping between nonresidential uses is intended to provide visual relief from pavement. It may, however, encourage passage between nonresidential properties by (a) providing five (5) foot wide pedestrian pathways through landscaping elements at locations suitable for safe pedestrian circulation and (b) using landscaping materials that allow a clear sight line between properties at a height of three (3) feet.

3. A minimum nine (9) foot-wide landscaped buffer, including shade trees, between the street or accessway pavement and the sidewalk or pedestrian pathway shall be provided where adequate public right of way exists.

Section 6.9 Screening

1. Where nonresidential uses and/or off-street parking facilities abut a residential zone the perimeter shall be screened to provide physical and visual separation between uses.

2. Natural screening shall consist of evergreen shrubs/trees planted in a line to form a continuous screen and growing to a height of 6 feet within 3 years. The remaining portion of the screening area shall consist of large and small trees, grass, flower beds, or other vegetative groundcover planted to fully cover the ground surface of the area within 3 years.

3. A 6-foot high fence or masonry wall may be substituted for natural screening if approved by the Planning Board. The wall or fence shall be placed on the exterior side of any landscaping.

4. All sites shall incorporate screening measures to prevent the headlights of vehicles from shining on adjoining residential areas.

5. All mechanical installations and equipment, solid waste collection equipment, pump stations, and outdoor storage shall be screened or softened with landscaping that is appropriate for the location.

Section 6.10 Maintenance and Replacement of Landscaping and Screening

1. The property owner shall be responsible for the maintenance, repair, and replacement of all required screening and landscaping materials.

2. All required plant materials shall be tended and maintained in a healthy growing condition, replaced when necessary, and kept free of refuse and debris. All required fences and walls shall be maintained in good repair.

3. The property owner will remove and replace dead or diseased plant materials immediately with the same type, size and quantity of plant materials as originally installed, unless alternative plantings are requested, justified, and approved by the Planning Board.

Section 6.11 Irrigation

1. Irrigation should be minimized to the extent possible through use of native drought tolerant species and the use of landscaping that does not require permanent irrigation systems.

2. When irrigation is necessary to support the establishment and/or maintenance of landscaped areas smart controllers shall be used that limit irrigation during the day and during rain events.

3. Where appropriate, additional water conservation features including trickle and drip lines, rain barrels, cisterns or other water harvesting elements shall be incorporated into the site design to help maintain plantings.

4. Applicants are encouraged to use recycled water for irrigation provided the harvesting and circulation systems and water quality meet the requirements of the City's Utility Ordinance and state standards.

5. Irrigation systems shall be installed and operated in accordance with the City's Utility Ordinance.

Section 6.12 Innovative Landscaping Practices

6.12.1 Green Roofs

Applicants are encouraged to use roofing materials that have a Solar Reflective Index (SRI) of at least 29 (greater for roofs with a slope of 2:12 or more) and to install vegetated roofs to minimize the runoff volume generated by the roof.

6.12.2 Solar Orientation

Applicants are encouraged to incorporate landscaping techniques that help reduce energy consumption for heating and cooling of buildings on the site. Trees should be planted in order to provide shade on buildings and parking lots in the warm seasons and to allow solar heat during the cool seasons.

Article 7 Water Resources Standards

Section 7.1 Low Impact Development (LID)

Applicants shall incorporate Low Impact Development (LID) site planning and design practices to the maximum extent practical (MEP) to reduce stormwater runoff volumes, maintain predevelopment site hydrology, and protect water quality in receiving waters. LID practices may include site design techniques (e.g., maintenance of vegetated buffers, minimizing of disturbance footprint) and structural measures to promote infiltration such as porous pavement, rain gardens or the capture / reuse of stormwater to reduce the stormwater volume discharged from the site. If LID practices are not proposed, the applicant shall fully demonstrate in writing why these practices are not feasible.

Section 7.2 General Water Quality and Stormwater Management Provisions

1. Water bodies, watercourses, and wetlands shall be preserved in their existing condition whenever possible.

2. All regulated substances shall be stored, transported, disposed or transferred in accordance with the rules for Best Management Practices for Groundwater Protection of the New Hampshire Department of Environmental Services (NH DES).

3. The proposed site development and use shall not adversely impact either the quality or quantity of groundwater available to surrounding properties or to public water supply systems or adjacent or downstream surface waters used for aquatic habitat support, aesthetic and/or recreational purposes.

4. For any on-site water system supplying 20,000 gallons per day (gpd) or more, evidence presented by a qualified hydrologist shall be sufficient to reasonably conclude that there will be no adverse effect on other public or private groundwater sources.

5. The development shall meet all applicable federal, state, and City regulations, statutes, ordinances, and standards regarding protection of water quality and stormwater management.

6. Stormwater treatment BMPs shall be designed to optimize nitrogen removal based on currently approved design standards and removal efficiencies listed in either the NH Stormwater Manual, as amended, Appendix F of the EPA NH MS4 Permit or as published by the UNH Stormwater Center.

7. Projects that involve replacement or adding new conveyance infrastructure that will connect to City infrastructure and/or are located on City property with a design life beyond 2050 (e.g. closed drainage pipes, bridges, culverts, etc.), shall incorporate applicable recommended flood protection measures and sizing design guidance contained in the *NH Coastal Flood Risk Summary: Part II: Guidance for Using Scientific Projections 2020* (as amended). The determination of applicability for such measures and design considerations shall be based on review by the City Engineer.

Section 7.3 Wellhead Protection Areas

1. The application for Site Plan Review shall indicate whether the proposed development is located in a wellhead protection or aquifer protection area, and such determination shall be approved by the Director of the Department of Public Works.

2. If the proposed development is determined to be located in a wellhead or aquifer protection area, the Planning Board may:

   (a) Require upgradient and downgradient U.S. EPA-type monitoring wells that are installed under the direction of a NH certified professional hydrogeologist;

   (b) Require that a first round of pre-construction samples be collected and analyzed and the results submitted to the Department of Public Works;

   (c) Determine that continued monitoring is necessary per the recommendation of the Department of Public Works;

   (d) Require an easement to access the monitoring wells in order to take future samples;

   (e) Require annual sampling of constituents of concern as determined by the Department of Public Works.

3. Within a wellhead protection area no more than twenty percent (20%) of a single lot or building site shall be rendered impervious to groundwater infiltration.

Section 7.4 Stormwater Management and Erosion Control Plan (SMECP)

The applicant shall submit a Stormwater Management and Erosion Control Plan.

The Planning Board shall approve the Stormwater Management and Erosion Control Plan if it complies with the requirements and objectives of these

regulations. Such approval shall be a component of the overall subdivision or site plan approval. If disapproved, the Planning Board shall furnish the applicant with a list of plan deficiencies and procedures for filing a revised plan.

The Planning Board may require a third-party review by a qualified professional consultant of any Stormwater Management and Erosion Control Plan prepared under these regulations at the applicant's expense.

The SMECP shall, at a minimum, contain the following information, however, additional information may be requested by the Planning Board depending on the proposed project, water quality issues and third-party review recommendations.

1. Narrative that describes the proposed development activity, the proposed changes in land use, land cover and impervious areas, the anticipated construction period and timing, project start and completion dates, sequence and duration of grading and construction activities, sequence and timing of installation and/or application of soil erosion and sediment control measures as well as sequence for final stabilization of the project site.
2. Description of onsite and adjacent wetlands, streams and other water bodies or natural resources and the methods used to identify these resources.
3. Description of Low Impact Development (LID) practices and other protective measures to limit impacts to adjacent natural resources and water bodies.
4. Description of any applicable buffer setbacks, steep slopes, existing mature vegetation, unique habitat conditions, 100-year floodplain limits, manmade and natural drainage conveyances and constraints and known water quality concerns based on local data or the NHDES 303(d) list.
5. Description of existing drainage patterns, receiving waterbodies or drainage infrastructure and soil types for recharge potential.
6. Methods and assumptions used to calculate pre-and post-development runoff volume, peak discharge, and discharge velocity for the specified design storms.
7. Description of the procedures that will be used to store and/or dispose of solid waste during construction such as demolition materials, concrete washout material litter, hazardous liquids such as equipment fuel, as well as sanitary waste that have the potential to cause adverse impacts to water quality.
8. Where proposed changes are anticipated within mapped limits of the 100-year floodplain, provide hydrologic and hydraulic analysis to show no net increase in flood elevations for the 100-year flood.
9. Description of the proposed erosion control and stormwater treatment measures, dewatering methods, including calculations of stormwater runoff rates and volumes and BMP sizing, a demonstration of no downstream impacts, inspection and maintenance procedures including discussion of roles and responsibilities and contingency measures for extreme precipitation events during construction.

10. Calculations for any proposed infiltration measures, including estimated infiltration rates based on test pit information and an estimate of the seasonal high-water table elevation. The calculations should account for frozen ground conditions, or when the devices may not function at their optimal design.
11. Any other specific study, calculation, or investigation as requested by the Planning Board (e.g. sea level rise estimates per other Regulations).
12. The SMECP and drainage plans shall be certified by a licensed professional engineer, registered in the State of New Hampshire.
13. Description of the proposed erosion control inspection and maintenance procedures including planned frequency, reporting, roles and responsibilities, contact information and contingency plans for extreme weather events.
14. A long-term post-construction stormwater BMP maintenance plan that describes inspection and maintenance procedures for all post-construction stormwater control measures including a description of the responsible party that will perform the long-term maintenance, reporting procedures and process for corrective actions.
15. Description of the procedures for removing temporary erosion control measures and removal of accumulated sediment captured by such measures.
16. For projects draining to inland wetlands and water bodes, the SMECP shall include a description of winter maintenance practices including any onsite salt storage and handling practices, snow storage and Best Management Practices that will be deployed to minimize the use of road salt.

Section 7.5 Construction Erosion Control Design Standards

The following standards shall be applied in selecting and designing appropriate stormwater management and erosion control measures during the construction phase. If a Stormwater Pollution Prevention Plan (SWPPP) has been prepared to comply with the EPA Construction General Permit (CGP), relevant portions of the SWPPP can also be utilized to satisfy the required SMECP contents, provided the listed required elements are included in the SWPPP.

1. The selection, sizing, installation and maintenance of all erosion and sediment control measures shall be consistent with the design guidance set forth in the NH Stormwater Manual, Volume 3 (as amended).
2. Whenever practical, natural vegetation (not included invasive species) shall be retained, protected and/or supplemented. Clearing of any vegetation shall be done in a manner that minimizes soil erosion. Vegetated areas to be retained should be clearly marked and protected using construction fencing or similar means.
3. Soil disturbance shall be avoided within established buffer setbacks as established by the City Wetland Protection section of the Zoning Ordinance.
4. The area of disturbance shall be kept to a minimum through innovative site

design and treatment methods that preserve and protect existing onsite and adjacent natural resources to the greatest extent practical.

5. Construction site disturbance should be phased to disturb only the amount of area needed to accommodate each phase of development and limit the amount of exposed soil area especially during winter months.
6. Adequate temporary solid waste and sanitary waste disposal facilities shall be maintained onsite during the construction period.
7. Adequate construction stone access pads shall be installed and maintained at the site entrance and exit locations to prevent mud and sediment from being tracked on to pavement.
8. An onsite pre-construction meeting shall be held with the City Engineer or designated representative prior to initiating earth moving activities and after perimeter erosion control measures, protective fencing, waste disposal and construction access pads have been installed.
9. Disturbed areas shall be either temporarily or permanently stabilized by measures consistent with the guidelines included in the NH Stormwater Manual**.** In areas where final grading has not occurred, temporary stabilization measures shall be implemented as soon as practicable but no later than (7) calendar days from the initial disturbance or as requested by the City Engineer. Disturbed soil areas that have achieved final grading shall be permanently stabilized within (3) calendar days after final grading.
10. Upgradient surface runoff from undisturbed areas shall be diverted away from disturbed areas where feasible or carried non-erosively through the project area. Integrity of downstream drainage systems shall be maintained.
11. Natural drainage patterns and conveyances, including intermittent streams, swales, and drainage ditches shall be maintained to the extent practical to convey runoff from the project area. Perimeter controls shall not be placed within wetland buffer areas or intermittent and perennial stream channels.
12. Winter stabilization measures shall be deployed on disturbed areas that will remain idle over the winter period as described in the NH Stormwater Manual, as amended.
13. All erosion and sediment control measures shall be designed and installed in accordance with guidelines including in the NH Stormwater Manual, as amended.
14. All erosion control measures and related drainage ways shall be routinely inspected and maintained by a qualified professional to ensure measures remain in functioning condition until final site stabilization is accomplished.
15. All temporary erosion and sediment control measures shall be removed after final site stabilization.

Section 7.6 Post-Construction Stormwater Management Design Standards

7.6.1 Post-Construction Stormwater Management Standards

All development and redevelopment projects that are subject to Site Plan Review shall use an array of best management practices to reduce and treat stormwater runoff prior to discharging from the development. The Applicant will prepare and submit a Stormwater Management and Erosion Control Plan (SMECP) to the Planning Board that describes relevant details on the various best management practices that will be used to protect water quality and prevent flooding and, at a minimum, meets the following design standards:

1. Adequate provisions shall be made to retain natural and existing flow patterns and maintain existing groundwater recharge volumes to the maximum extent feasible, where appropriate, and/or retain, treat and/or potentially reuse the stormwater generated on the site.

2. Efforts shall be made to utilize methods that disconnect and/or reduce the amount of effective impervious area including, but not limited to, infiltration trenches, dry wells, bioretention areas, filter strips, permeable pavement, and cisterns.

3. Applicants shall demonstrate why on-site infiltration approaches are not possible or adequate before proposing the use of conventional systems that rely on collection and conveyance to remove runoff from the site.

4. All proposed stormwater treatment practices shall be adequately sized to treat the Water Quality Volume (WQV) or Water Quality Flow (WQF) in order to minimize pollutant discharges and be properly maintained in accordance with NH Administrative Code PART Env-Wq 1507.03 "Pollutant Discharge Minimization Requirements" and PART Env-Wq, 1707.03, respectively (or as revised / renumbered).

5. Where vegetated areas are used to control and treat stormwater, such areas shall be planted with appropriate non-invasive groundcover, shrubs and/or other plantings sufficient to prevent soil erosion and to promote proper treatment of stormwater.

6. Measures shall be taken to control the post-development peak rate of runoff so that it does not exceed pre-development runoff for the 2, 10, 25, and 50-year, 24-hour storm event. Rainfall amounts for these events shall be based on local rainfall data using the extreme precipitation table provided by the Northeast Regional Climate Center or as otherwise required by the NHDES Alteration of Terrain requirements, if applicable. Where stormwater will

discharge directly to tidal waters, the Planning Board may waive peak flow control requirements provided the Applicant can demonstrate minimal risk of flooding or increased erosion as result of the discharge, adequate onsite stormwater treatment is provided for water quality purposes and the City Engineer concurs with the waiver request.

7. Site development shall comply with the requirements of the Flood Plain District as regulated by the Zoning Ordinance.

8. BMP designs shall include appropriate separation distances from the seasonal high-water table elevations, where appropriate, and as specified in the *New Hampshire Stormwater Manual* (as amended).

9. Salt storage areas shall be covered using permanent or semi-permanent measures and loading/offloading areas shall be located and designed to not drain directly to receiving waters and be maintained with good housekeeping measures in accordance with NHDES guidance documents.

10. Snow storage areas shall be located such that no direct discharges to receiving waters are possible from the storage site. Runoff from snow storage areas shall enter treatment areas to remove suspended solids and other contaminants before being discharged to receiving waters or preferably be allowed to infiltrate into the groundwater.

11. The applicant shall demonstrate that there is sufficient on- and off-site downstream channel or system capacity to carry the stormwater run-off volume and flow without adverse effects, such as flooding and erosion of stream banks and shoreland areas.

12. Stormwater treatment BMPs involving excavation or other site alterations shall be located outside of protected wetland buffer areas as defined in the City's Zoning Ordinance Article 10 -- Environmental Protection Standards unless approved under a Conditional Use Permit as outlined Article 10, as amended.

13. In addition to the requirements of this Article, all developments subject to Site Plan Review shall comply with the City's Regulation of Discharges into the Stormwater Drainage System Ordinance.

14. The applicant shall submit documentation demonstrating how and who will maintain stormwater treatment devices post-development.

15 Property owners of new development projects that will add new paved areas shall minimize their salt use through appropriate measures including hiring Green SnowPro certified operators for winter maintenance.

7.6.2 Enhanced Stormwater Treatment Standards for New and Redevelopment Disturbing More than 15,000 square feet of Area

1. New Development

In addition to the Basic Stormwater Management Design Standards listed above, all new development projects that will disturb more than 15,000 square feet of area and are subject to Site Plan Review shall meet the enhanced stormwater treatment standards to minimize the discharge of pollutants consistent with the NH MS4 Stormwater Permit and N.H. Code Admin. R. Part Env-Wq 1507.03, and shall include but not limited to the following:

(a) Retain or treat stormwater runoff before discharged to a surface water or the MS4 system by one of the following:

i. Adequately size and install BMPs that are designed to retain the Water Quality Volume from the total post-construction impervious area calculated in accordance with N.H. Code Administrative Rules Part Env-Wq 1504.10, OR

ii. Include BMPs designed to remove 80% of the average annual Total Suspended Solids (TSS) load and 50% of the average annual Total Nitrogen (TN) load generated from the total post-construction impervious area.

(b) Applicants shall provide details on the proposed BMPs in the SMECP including type, location, sizing and related calculations that demonstrate both the Basic and Enhanced Stormwater treatment standards will be met and the export of TSS and nutrients from the site have been minimized to the maximum extent practical given the proposed use and the characteristics of the site.

(c) Runoff from new development shall meet the anti-degradation provisions of the state water quality standards (Env-Wq 1700) that require that no additional pollutant loads shall contribute to existing water body impairments.

(d) Proposed projects that will drain to inland wetlands and water bodies and will create additional roadway or ten (10) or more additional parking spaces, the Applicant shall develop a winter maintenance plan that describes any onsite storage and handling of road salt, anticipated snow storage areas, and efficient deicing practices that will limit the amount of road salt used including the use of Green SnowPro Certified Operators

2. Redevelopment Projects: Redevelopment refers to any proposed development activity subject to Site Plan Review on an existing parcel where 40% or more of its developable land is comprised of impervious surfaces. Stormwater from the disturbed portion of the redevelopment site shall be treated by one of the following techniques, listed in order of preference:

   (a) Implement LID or stormwater treatment BMPs that will disconnect and/or treat at least 30% of the existing impervious cover and 100% of any additional proposed impervious surfaces or paved areas preferably using filtration and/or infiltration practices; or
   (b) Implement LID or stormwater treatment measures to disconnect or treat at least 60% of the entire developed area.

7.6.3 Additional Pollutant Tracking and Accounting Program (PTAP) Submittal Requirements

All applicants shall submit, as part of the Final Post Approval Procedures (See Section 2.15), relevant PTAP information using the most recent online data portal currently managed by the UNH Stormwater Center and included on their website. The Planning Department shall be notified and copied of the PTAP data submittal. This may include, but not be limited to, the following information which will be submitted as part of the site plan application:

1. Property address, parcel map no., parcel size, property owner and contact information, Applicant's Engineer contact information.
2. Current property use, amount of existing developed area, impervious area and vegetated area draining to each receiving water body.
3. Proposed property use, amount of disturbed area, impervious area and vegetated area draining to each receiving water body.
4. Description of existing and proposed stormwater drainage conveyances and treatment BMPs and amount of impervious area expected to be treated before discharging to specific water bodies.
5. Direct Receiving Water Body, NHDES HUC Assessment Unit No. and any listed water quality impairments.
6. Maximum effective impervious surface cover that contributes to stormwater leaving the site shall be minimized to the maximum extent feasible. Applicants shall provide a calculation of the maximum effective impervious surface as a percentage of the site.
7. For purposes of these regulations, the total impervious area of a lot or site is defined as the total area of impervious parking lots, accessways, driveways, roof area, decks, paved walkways, sidewalks, and any concrete, stone, brick, asphalt or compacted gravel surface.
8. Impervious surfaces may be disconnected from the stormwater drainage network to reduce the total effective impervious surface cover through such techniques as infiltration or sheet flow over pervious area.

9. Estimates of pollutant load reductions or pollutant removal efficiencies provided by the proposed BMPs based on the impervious area and expected WQV volume treated and removal efficiencies provided in Appendix F or the NH MS4 Permit, published data reported by the UNH Stormwater Center or Appendix E of the NH Stormwater Manual, as amended.
10. Information on the long-term maintenance plan for the proposed BMP(s) including identifying the responsible party, inspection frequency and the reporting procedures consistent with the details identified in Sec. 7.4.6 below.

7.6.4 Responsibility for Installation and Construction

1. The applicant shall bear final responsibility for the installation, construction, inspection and disposition of all stormwater management and erosion control measures required by the provisions of these regulations.

2. Installation of stormwater management and erosion control measures shall be overseen by a qualified engineer and the Planning Board may require independent review and oversight.

3. The Applicant shall provide the City with an emergency contact name and number for stormwater management emergency incidents. The contact name and number shall remain current during the life of the permit and shall be able to respond to emergencies as soon as possible within no more than four (4) hours at any given time.

7.6.5 Inspection and Maintenance Plans.

1. Long-term Inspection and Maintenance (I&M) Plan

   The applicant shall develop and execute an enforceable inspection and maintenance plan for both erosion control measures and permanent stormwater treatment measures to maintain their effectiveness for the duration of their useful life. The I&M Plan shall contain relevant protective covenants or land preservation commitments with a long-term agreement that specifies who will be responsible for inspecting and maintaining the long-term integrity and the stormwater BMP functions and protected area. The I&M Plan shall be provided to the Planning Board as part of the application review process prior to issuance of any local permits for land disturbance and construction activities. The Plan shall include the following items at a minimum:

   (a) This agreement will identify the Owner/ Operator and their successor that will be responsible for perform the inspections and maintenance and the ability to access these BMPs including all maintenance easements required to access and inspect the stormwater treatment practices, and to perform routine maintenance as necessary to ensure proper functioning of the stormwater system.

   (b) During the construction period, inspections shall be conducted at least once every seven (7) calendar days or once every 14 calendar days and

within 24 hours of the end of a storm event of 0.5 inch or greater.

(c) Permanent Stormwater BMPs shall be inspected annually following post-construction

(d) The operations and maintenance plan shall specify the parties responsible for the proper maintenance of all stormwater treatment practices.

(e) The approved plan shall be incorporated into the agreement of the property on which such measures are located and recorded at the Rockingham County Registry of Deeds. The narrative shall be in the form of a typical Development agreement, or as otherwise set forth by the Planning Board.

2. Inspection reports are to be filed on-site in a location easily accessible to a City Engineer.

3. If the Applicant is unable to adequately provide the required inspection and maintenance activities during construction, the City may require additional escrow funding to be used by either the Applicant or the City solely to repair, replace and/or maintain the required measures.

4. As a condition of Planning Board approval, the owner, their successor and assigns shall consent to inspections by the Planning Board or its designee for compliance with these regulations.

Article 8 Utilities Standards

Section 8.1 General Provisions.

1. The development shall be provided with all utilities to adequately meet the anticipated use of the project.

2. All new and relocated wires, conduits, and cables shall be located underground.

3. All electrical and mechanical devices including transformers, telecommunications devices, equipment switching boxes, generators, and other utility cabinets shall be located within buildings when possible or hidden from street and pedestrian areas with landscaping or architectural screens when located outside according to the requirements of Article 6.

4. Temporary overhead power and telephone lines are permitted during construction only.

5. Utility equipment for private development shall not be built in public rights of way.

Section 8.2 Water Supply and Distribution System

1. Where a public water supply is reasonably accessible or required because of groundwater pollution problems, the development shall be provided with a complete water distribution system, including a connection for each legally subdivided lot in accordance with the City Utility Ordinance.

2. Adequacy of public water supply will be determined using existing DPW hydraulic models and studies.

3. Fire hydrants shall be located within five hundred (500) feet of a building (distance measured as usable, not as straight line).

4. Fire hydrants shall be served by a minimum 8 inch main.

5. Fire hydrant flow tests shall yield flow determined adequate for the project by the TAC.

6. The size, flow rate, and pressure of water mains serving the project shall comply with the City Utility Ordinance.

Section 8.3 Sanitary Sewers

All sewage disposal systems shall be designed, constructed and operated in conformance with the NH DES requirements in a manner that will prevent the spread of disease and illness; prevent the pollution of the municipality's brooks, streams, ponds, lakes, and groundwater table; and assure an adequate supply of potable and palatable water for human consumption.

8.3.1 Sewerage System

Existing sewer mains or lines into which the project will connect shall be capable of transporting estimated sewage generated in accordance with the City's Sewer Use Ordinance.

8.3.2 On-site Sewage Disposal System Design

In cases where connection to City sewer systems is not required, on-site sewage disposal systems shall meet NH DES rules and regulations. If required, the City may also conduct an independent review of the on-site disposal system design.

8.3.3 Design and Installation

1. All waste disposal systems shall be designed and installed in accordance with the rules, regulations and design criteria adopted by the NH DES and with the City's Utility Construction Manual.

2. Where an on-site sewage disposal system is proposed, the application shall list the types of uses for which the proposed system is designed.

8.3.4 Fats, Oil and Grease Controls

Measures for the treatment and disposal of fats, oils and greases shall conform to the City's Sewer Use Ordinance.

Section 8.4 Other Utilities

Preliminary approval from the applicable utility company for all other utility services including but not limited to electric, telephone, cable TV, and gas shall be secured prior to approval by TAC. Approvals shall be documented on site plans as appropriate.

Section 8.5 Oversize and Off-Site Improvements

The Planning Board may require that utilities for the proposed site plan be designed oversized, and/or with additional conduits or extensions provided within the public right-of-way, to serve nearby land that is an integral part of the neighborhood service or drainage area.

Article 9 On-Site Waste Storage and Disposal Standards

Section 9.1 Waste Accumulation

Except as otherwise allowed by City ordinances, owners and managers of every property shall be responsible for maintaining all open areas free of improperly stored solid or liquid waste accumulations.

Section 9.2 Storage Containers

1. Every property shall be supplied with adequate solid, semi-liquid, and liquid waste storage containers. These containers shall be provided by the owner of the property, construction company or by contract with a commercial hauler.

2. All solid waste storage containers shall be resistant to insect or animal entry. Liquid waste may only be stored in tanks designed for the particular waste type.

3. Containers will be constructed with rust and impact resistant materials and will be equipped with tight-fighting covers. Containers shall have an appropriate child safe design and be secure from unauthorized access after business hours (locked). The property owner is responsible for maintaining containers in a neat, clean, sanitary, and leak-free condition.

4. All containers for regulated substances shall meet all applicable federal, state, and local standards.

Section 9.3 Location and Disposal

1. The owner of a property shall insure that the contents of all waste containers are to be emptied or removed for disposal as necessary to prevent nuisance odors and public safety hazards.

2. An appropriate location shall be provided for permanent placement of waste and recycling containers.

3. An appropriate location for temporary placement of waste and recycling containers for collection purposes shall be indicated on all site plans. Such locations shall provide for the safe, accessible and convenient placement of storage containers that do not interfere or impede daily operations and uses on the site or neighboring properties. Such locations shall provide adequate accommodation for access by waste collection and disposal vehicles so as not to damage sidewalks or other City property.

4. Dumpsters and other large exterior waste containers shall be located at service entrances and at the rear of buildings.

5. Dumpster or other waste container pads shall be a minimum of 20 feet from any property line or yard.

6. Dumpster or other waste container pads shall be a minimum of 20 feet from any inlet for stormwater collection.

7. The effluent from any stormwater pipe that drains the area where a dumpster or other waste storage container is located shall traverse a minimum of 50 feet of vegetated area before reaching the banks of the watercourse itself.

8. When a dumpster or other waste storage container pad is adjacent to a watercourse, a minimum landscaped area of 50 feet shall be maintained between the pad and the bank of the watercourse.

9. Recycling shall comply with the City's Solid Waste, Yard Waste and Recycling Ordinance.

10. Permanent and temporary storage locations for all waste and recycling containers shall provide access for waste removal vehicles without damage to sidewalks or other City property.

Section 9.4 Flammable and Combustible Liquids.

All flammable and combustible liquids shall be contained and stored in accordance with the National Fire Protection Association's standards and the International Fire Code. Location of all flammable, combustible and hazardous material storage shall be provided to the Fire Department along with a copy of all required Material Safety Data Sheets (MSDS) prior to Fire Department approval.

Section 9.5 Screening

Screening of on-site waste storage and disposal equipment shall be provided as required in Article 6, of these regulations.

Article 10 Outdoor Lighting

Section 10.1 General Provisions

All projects submitted for Site Plan Review shall provide dark sky friendly outdoor lighting according to these regulations in order to:

(a) Permit reasonable uses of outdoor lighting for night-time safety, utility, security, productivity, enjoyment and commerce;

(b) Minimize glare, obtrusive light, and artificial sky glow by limiting outdoor lighting that is misdirected, excessive, or unnecessary;

(c) Conserve energy and resources to the greatest extent possible.

Section 10.2 Compliance with Zoning Ordinance

All projects shall comply with the outdoor lighting dark sky friendly standards provided in the Zoning Ordinance.

Section 10.3 Lighting Plan

1. When a proposed project includes outdoor lighting, the Site Plan shall include a lighting plan which shall show:

   (a) The location on the site where outdoor lighting fixtures (both pole and mounted) will be installed.

   (b) Scaled plans indicating the location of outdoor lighting fixtures on the site, the height of each fixture, the types of outdoor lighting proposed, and the level of wattage and initial lumens for all light sources.

   (c) A description of the outdoor lighting fixtures including but not limited to manufacturer's catalog descriptions and drawings. The required plans and descriptions shall be sufficiently complete to enable the Planning Board to readily determine compliance with the requirements of this regulation.

   (d) A photometric (iso-lux) plan indicating levels of illumination, in foot candles, at ground level.

2. The maintained horizontal illuminance standards set by the Illuminating Engineering Society of North America (IESNA) shall be observed.

3. Should any outdoor light fixture, or the type of light source therein, be changed after the building permit has been issued an amended site plan approval shall be required.

Section 10.4 Lamps

1. Lamp types shall be selected for optimum color rendering as measured by their color rendering index (CRI), as listed by the lamp manufacturer.

2. Lamps with a color rendering index lower than 50 are not permitted. This requirement shall not apply to decorative lighting which may include colored lamps, such as holiday lighting.

3. Commercial lighting shall meet minimum IESNA illumination levels while not exceeding IESNA uniformity ratios and average illuminance recommendations.

Article 11 Radio Communications Standards

Section 11.1 Site Survey

1. When necessary to provide emergency response communication to the site and at the request of the police or fire department, the applicant shall have a site survey conducted by a radio communications carrier approved by the City's Communications Division. The radio communications carrier must be familiar and conversant with the police and fire radio configuration.

2. If the site survey indicates that it is necessary to install a signal repeater either on or near the proposed project, those costs shall be the responsibility of the property owner.

3. The property owner shall be responsible to pay for the site survey whether or not the survey indicates a repeater is necessary.

4. The owner shall coordinate with the supervisor of radio communications for the City.

Attachment A: Digital As-Built Plan Requirements

1. The digital plan must show the same features as the hardcopy plan, including, but not limited to, structures, utilities, property lines, and survey monuments. Text items, such as titles and dimensions, are allowed but not required.

2. The file format must be either AutoCAD DWG, AutoCAD DXF, or an ESRI format. The plan must be in a single digital file with no external reference ("XREF").

3. The plan must be created in model space, with drawing units of U.S. survey feet. The north rotation must be 0°. New Hampshire state plane coordinates, NAD83 (1996), are preferred.

4. The features must be in the CAD layers and a list of layers shall be provided. Features that do not have a layer specified in this list must be in a separate, unique layer and identified in accompanying documentation. The City will provide a template CAD file upon request.

5. When creating line features that would represent polygons in a GIS, such as property lines and building footprints, the CAD user must snap end points of lines together and must make sure polygons close. All line features must be of a continuous line-type, such that each individual line/pipe feature (i.e. each segment) is only broken at the ends where a node/structure is located. Straight lines must be represented by only the beginning and ending x- and y-coordinate points.

6. All point features shall be entered using standard point/node symbols.

7. When choosing reference features, the applicant must begin at the top of the list. For example, manhole covers may only be used if no hydrants or valves are available. The reference features should be as far from each other as practical. If suitable features are not available within 750 feet (by survey traverse) of the project area, then the applicant shall, at the discretion of the Planning Director, either use alternative features or omit the features. The following reference features are allowed: survey control monuments with horizontal accuracy of at least FGDC Second Order, Class II, including City monuments; fire hydrant spindles, water main valves, and sewer force main valves; sewer or drain manhole cover centers; catch basin centers.

8. The digital plan must be accompanied by electronic documentation, such as a text file, containing the following information: the name of the applicant and the preparer of the plan; the name and version of the CAD software used to create the plan; the project address and/or parcel number.

Attachment B: Topsoil Specifications

1. The City of Portsmouth recommends a mixture of ¾ loam, and ¼ compost for all topsoil areas. This includes but is not limited to planting beds, turf areas and the green strip between the sidewalk and roadway.

2. The City requires a chemical and composition soil test for this mixture before applying to any areas.

3. The soil mixture shall be applied at a minimum depth of 6”.

4. Loam should consist of 40% sand, 40% silt, and 20% clay.

5. Compost shall meet all of the following criteria and a soil test shall be provided from the compost distributor:

    a. Product shall be manufactured through the controlled aerobic, biological decomposition of biodegradable materials;

    b. Product shall have undergone mesophilic and thermophilic temperatures in order to reduce the viability of pathogens and weed seeds, and stabilize the carbon such that it is beneficial to plant growth;

    c. Product sanitization through the generation of thermophilic heat shall meet the standards of the Processes to Further Reduce Pathogens (PFRP), as defined by the Code of Federal Regulations Title 40, Part 503, Appendix B, Section B;

    d. Product shall bear little physical resemblance to the raw material from which it originated;

    e. Product shall be an organic matter source that has the unique ability to improve the chemical, physical, and biological characteristics of soils or growing media.

CITY OF PORTSMOUTH, NEW HAMPSHIRE

SUBDIVISION RULES AND REGULATIONS

Adopted by Portsmouth Planning Board: March 14, 1985
Last Revision: November 19, 2020

SUBDIVISION RULES AND REGULATIONS

TABLE OF CONTENTS

PURPOSE **1**

SECTION I - AUTHORITY **2**

SECTION II - DEFINITIONS **2**

SECTION III - PROCEDURE FOR SUBDIVISION AND LOT LINE CHANGE **4**

A. Preapplication Review 4
B. Review by Technical Advisory Committee 5
C. Applicant's Responsibilities 6
D. Planning Board Procedures 7
E. Approval Expiration and Extension 8
F. Certification of Final Approval 9
G. Post-Approval Procedures 9

SECTION IV - REQUIREMENTS FOR PRELIMINARY PLAT **10**

SECTION V - REQUIREMENTS FOR FINAL PLAT **12**

SECTION VI - GENERAL REQUIREMENTS **14**

1. Basic Requirements 14
2. Lots 14
3. Streets 15
4. Curbing 18
5. Driveways 18
6. Drainage Improvements 18
7. Municipal Water Service 18
8. Municipal Sewer Service 19
9. Installation of Utilities 19
10. On-Site Water Supply 20
11. On-Site Sewage Disposal Systems 20
12. Open Space 20
13. Flood Hazard Areas 21
14. Erosion and Sedimentation Control 22
15. Easements 23
16. Monuments 24
17. Benchmarks 24
18. House Numbers 24

SECTION VII - DESIGN STANDARDS 25
1. Streets 25
2. Storm Water Sewers and Other Drainage Appurtenances 27
3. Sanitary Sewers 28
4. Water Mains and Fire Hydrants 29

SECTION VIII - FINAL PLAN REQUIREMENTS 31
A. Submission Requirements 31
B. Specifications 31

SECTION IX - DEVELOPMENT PREREQUISITE TO FINAL APPROVAL 32
1. Improvements and Installation Bonds 32
2. Maintenance Bonds 32

SECTION X – WAIVER OF REGULATIONS 32

SECTION XI – AMENDMENTS 33

PURPOSE

Consistent with the purpose of the State enabling legislation (RSA 36-21), these regulations are intended to insure the orderly development of the City of Portsmouth by providing that subdivisions are served with adequate utilities and safe, convenient access and with a desirable and attractive living environment. Furthermore, it is the intent of the Planning Board to promote the utilization of sound development standards which are directed toward providing realistic and feasible costs both for the initial project development as well as for continued maintenance of all of the project's public systems by the City.

Among the objectives of the subdivision regulations are:

1. A proper distribution of the population which is compatible with adjacent uses while providing for the harmonious development of the municipality and its environs.

2. The avoidance of overcrowding of population, blighted areas and congestion of vehicular traffic.

3. The avoidance of development which impedes the function of the natural drainage system and flood areas.

4. The proper location and width of streets, open spaces, recreational areas and public lands.

5. The use of established engineering standards for the installation of improvements in the provision of water, sewer, storm drainage and other utility services, and also the proper grading and construction practices of streets.

6. The provision of adequate space for traffic circulation and parking; for access of emergency apparatus; and for control of the number, spacing, type and design of access points to existing and future streets.

SECTION I - AUTHORITY

The Portsmouth Planning Board prescribes the following rules and regulations to control the subdivision of land pursuant RSA 674:35 et seq. – Regulation of Subdivision of Land and the City of Portsmouth Ordinances, Chapter 11, Article IV – Subdivision of Land.

SECTION II - DEFINITIONS

Except where specifically defined herein, all words used in the Rules and Regulations shall carry their customary meaning.

Abutter: Any person who owns land within two hundred (200) of the boundaries of the land under consideration.

Alley: A public or private right-of-way primarily designed to serve as secondary access to the side or rear of those properties otherwise abutting on a street.

Applicant: The owner of record of the land for which subdivision is proposed. The holder of an option or agreement to purchase the subject property shall be co-listed as an applicant.

Board: The Planning Board of the City of Portsmouth, New Hampshire.

Building: Any structure whether temporary, semi-permanent, or permanent, designed or intended for the support, enclosure, shelter, or protection of persons, animals, or property.

Cul-de-sac: A local street with only one outlet and having an appropriate terminal for the safe and convenient reversal of traffic movement.

Development: Any change in a lot by the property owner or agent presumably to increase the value of the lot.

Driveway: A private road intended to provide vehicular access from a public way onto a single lot.

Easement: Authorization by a property owner for any type of use by another for a specified purpose of any designated part of his property.

Flood Hazard Zone: That portion of land which has one percent (1%) chance of flooding in any given year, as designated on Flood insurance Rate Maps issued by the Federal Emergency Management Agency.

Frontage: A continuous portion of a boundary of a lot which abuts a street, ordinarily regarded as the front of the lot. When a lot is bounded by more than one street, any one of them , but only one, may be designed as the frontage street by the owner, provided that the street meets the frontage requirement and the principal permitted building on the lot is numbered on such street.

Lot: A tract, plot or portion of a subdivision or other parcel of land in one ownership with definite boundaries ascertainable by recorded deed or plan which is available for use as a building site or for any other definite purpose.

Plat: The map, drawing or chart on which the subdivider's plan of subdivision is presented to the Planning Board for approval.

Resubdivision: A change in an approved or recorded subdivision plat if such change affects any street layout on such plat or area reserved thereon for public use, or any lot line; also a change in any map or plan legally recorded prior to the adoption of any regulations controlling subdivisions.

Right-of-way: A part of a lot provided by the property owner for use by a second party. Rights-of-way involving maintenance by a public agency shall be dedicated to public use on a subdivision plat.

Screening: Either (A) a strip of at least ten (10) feet wide, densely planted (or having equivalent natural growth) shrubs or trees at least four (4) feet high at the time of planting of an evergreen type that will grow to a year round dense screen at least six (6) feet high within three (3) years; or (B) an opaque wall or barrier or uniformly painted fence at least six (6) feet height. Screening of either type shall be maintained in good condition at all times.

Street: A right-of-way which has been dedicated or intended for public travel or a private way offering the principal means of access to more than one lot. Also included are terms such as avenue, boulevard, road, lane, alley, highway, viaduct, freeway, court, way, and drive.

Subdivision: “Subdivision” means the division of the lot, tract, or parcel of land into two or more lots, plats, sites, or other divisions of land for the purpose, whether immediate or future, of sale, rent, lease, condominium conveyance or building development. It includes resubdivision and, when appropriate to the context, relates to the process of subdividing or to the land or territory subdivided. The division of a parcel of land held in common and subsequently divided into parts among the several owners shall be deemed a subdivision under this title. (Revised 3/14/85)

Wetland: An area with soils having poor drainage where the water table is at or near the ground surface for at least seven months of the year. Vegetation present which are characteristic of wet areas shall serve as above ground indications of wetlands.

SECTION III - PROCEDURE FOR SUBDIVISION AND LOT LINE CHANGE

A. Preapplication Review

1. Preapplication Review – General

    a. An applicant may request to meet with the Planning Board for preliminary nonbinding discussions of a proposal as authorized by RSA 676:4, II, and as further provided herein. An applicant may request to meet with the Board for either Preliminary Conceptual Consultation or Design Review, or both. The preliminary conceptual consultation phase is mandatory for certain applications as stated in Section III.A.2 below.

    b. Discussions in the Preliminary Conceptual Consultation and Design Review Phases shall not bind either the applicant or the Board. Statements made by Planning Board members during either phase shall not be a basis for disqualifying said members or invalidating any action subsequently taken by the Board.

    c. Preliminary review shall be separate and apart from formal consideration of an application for subdivision approval, and the time limits for acting on a proposal shall not apply until a formal application has been submitted and has been determined by the Planning Board to be complete.

2. Preliminary Conceptual Consultation Phase [see RSA 676:4,II(a)]

    a. The applicant may request a meeting with the Planning Board to discuss a proposal in conceptual form. The preliminary conceptual consultation phase is mandatory for any application that includes the subdivision of more than 5 acres of land or the creation of more than 5 lots, and shall precede referral and review to the Technical Advisory Committee.

    b. A request for preliminary conceptual consultation shall be submitted to the Planning Department at least 21 days prior to the date of a scheduled meeting of the Board, and shall be accompanied by 12 copies of any plans, sketches and other documents or exhibits to be discussed with the Board, along with digital copies of said documents and exhibits in Portable Document Format (PDF).

    c. Preliminary conceptual consultation may occur only at formal meetings of the Planning Board. However, such discussions shall not be the subject of a public hearing, and formal notice of abutters and the public shall not be required.

    d. Preliminary conceptual consultation shall be directed at review of the basic concept of the proposal and suggestions that might be of assistance in resolving problems with meeting requirements during final consideration. The Board and the applicant may discuss proposals in conceptual form only and in general terms

such as the desirability of the proposed development type, scale, intensity and layout under the Master Plan.

3. Design Review Phase [see RSA 676:4,II(b)]

    a. The applicant may request to meet with the Board for nonbinding discussions of a potential application that involve more specific design and engineering details than in the preliminary conceptual consultation phase.

    b. A request for design review shall be submitted to the Planning Department at least 21 days prior to the date of a scheduled meeting of the Board, and shall be accompanied by 12 copies of all plans and exhibits, along with digital copies of said documents and exhibits in Portable Document Format (PDF).

    c. The request for design review shall include enough of the information listed in Section IV – Requirements for Preliminary Plat so that the Board is able to review the project. Detailed engineering of infrastructure and utilities are not required at the design review phase, but the information listed in Section IV should be displayed in sufficient detail to enable the Board to understand the proposed project and identify potential issues and concerns.

    d. At a regular meeting of the Planning Board, the Board shall determine if the request for design review includes sufficient information to allow the Board to understand the project and identify potential issues and concerns, and shall vote on whether to accept the request for design review and to schedule a public hearing. If the Board determines that the request does not describe the proposed project in sufficient detail, it shall notify the applicant of the specific deficiencies that need to be addressed.

    e. Design review discussions shall take place in a public hearing at a regularly scheduled meeting of the Planning Board, after notice to abutters, holders of conservation, preservation, or agricultural preservation restrictions, and the general public as required by State statute.

    f. At any public meeting of the Planning Board, the Board may determine that the design review process of an application has ended and shall inform the applicant in writing within 10 days of such determination.

B. Review by Technical Advisory Committee

1. The Site Plan Review Technical Advisory Committee (TAC) established in Section 2.2.1 of the Site Plan Review Regulations shall review any application for subdivision approval prior to Planning Board review if it contains any of the following:

    a. Creation of a new lot;
    b. Construction of a new public or private street;

c. Widening or realignment of an existing public or private street;
d. Construction of public or private water, sewer or stormwater facilities serving more than one lot;
e. Establishment of an easement over one lot for water, sewer or stormwater facilities to serve a different lot; or
f. Provision of a common driveway or access easement;

2. In addition to the applications that are required to be reviewed by TAC as provided above, the Planning Board may refer any application for subdivision approval to TAC where it determines that such review is advisable.

3. The procedure for TAC review of subdivision applications shall be the same as for site plan review.

C. Applicant's Responsibilities

1. The applicant is invited to discuss the plans for subdivision with the Planning Department on an informal basis prior to formal application.

2. When review by TAC is required under Section III.B.1, the applicant shall submit a completed application on a form entitled "Subdivision Application" along with 12 copies of the preliminary or final plat and supporting documents and studies. The application shall be submitted by the deadline established by the Planning Department for submission of applications for site plan approval, and in any case not later than 31 days prior to the meeting at which the application will be accepted. After review of the application by the TAC, the applicant shall submit 12 copies of the application to the Planning Board.

3. When review by TAC is not required under Section III.B.1, the applicant shall submit to the Planning Board an application in writing on a form entitled "Subdivision Application", along with 12 copies of the preliminary or final plat and supporting documents and studies, not later than 21 calendar days prior to the meeting at which the application will be accepted**.**

4. All application documents, plans, supporting documentation and other materials shall also be provided in digital Portable Document Format (PDF) on compact disc, DVD or flash drive. Digital files shall be complete and exact copies of the corresponding paper submittals (e.g., plans shall be at the same scale and sheet size as the paper copies). Applicants <u>may</u> submit additional digital files to assist in presentations at public hearings, but such additional digital files shall not be considered part of the application unless corresponding paper documents are also provided.

5. At the time of submission of the application and preliminary or final plans, the applicant shall pay a fee as set by City Ordinance.

   All postage costs for abutter notices and proportionate share of legal advertising shall be paid prior to the Public Hearing.

6. Where subsequent Public Hearings for a project are required for Preliminary Subdivision Approval and/or Final Subdivision Approval, the postage costs for abutter notices and a proportionate share of legal advertising shall be paid prior to the Public Hearing.

7. If an application is withdrawn prior to a Public Hearing, the applicant will be allowed to resubmit the application before the next regularly scheduled Board meeting in conformance with Section III.B.2. and be held responsible for the costs of postage, abutter notices, and a proportionate share of legal advertising only. Where the application is not resubmitted in accordance with Section III.B.2. it will then be considered as a new application and all costs shall be as if the application is being submitted for the first time.

8. The applicant or an authorized representative should appear at the hearing held by the Board on the proposed subdivision to explain the plan and to answer questions which may be asked by Board members.

9. Preliminary Approval shall expire unless a mylar and twelve (12) copies of the final plat (see Section V for final plat requirements) are submitted to the Planning Board within one (1) year from the date that preliminary approval is granted. The Board may, for good cause shown, extend such period by as much as one (1) year if requested and acted upon, prior to the expiration date. No other extensions may be requested.

10. The applicant shall also submit payment for the Registrar of Deeds to cover the current cost of filing of plats. The application for "Approval of Subdivision of Land" shall itemize such charges.

D. Planning Board Procedures

1. Upon receipt of a formal application and preliminary plans, the Board shall place on its agenda for consideration any plat submitted to it within thirty (30) days. No plat shall be approved or disapproved by the Board without affording a public hearing thereon. Such hearing shall be duly advertised and the applicant and abutters shall be notified of the time and place of such hearing not less than ten (10) days prior to the hearing.

   At the Board meeting, the Board shall act to deny any application which is not in compliance with Section IV or V as appropriate.

2. Following a hearing on the subdivision plan, the Board shall approve, conditionally approve, deny or table the proposed subdivision plans. Approval of a preliminary plat shall become null and void after one (1) year unless a final plat is submitted to the Board or the Board grants an extension of time.

3. The Board shall notify the applicant, in writing, within twenty (20) working days, as to its decision. If the Board denies the preliminary plans, the Planning Board Chairman shall provide to the applicant, in writing, the reasons for the denial.

4. The Board shall act to approve or disapprove a preliminary plat within ninety (90) days after acceptance of the application, unless the applicant waives this requirement or the City Council, upon request by the Board, grants an extension not to exceed an additional ninety (90) days. Upon failure of the Board to approve or disapprove the application, the applicant may obtain from the City Council an order directing the Board to act within fifteen (15) days. Failure of the Board to act upon such order of the City Council shall constitute grounds for appeal to the Superior Court, upon petition of the applicant, to issue an order approving the application if the Court determines that the proposal complies with existing subdivision regulations, zoning, and other ordinances. If the Court determines that failure to act within the time specified was the fault of the Board and was not justified, the Court may order the Board to pay the applicant's reasonable costs, including attorney's fees, incurred in securing such order.

5. Upon submission of a final plat, the Board shall approve or disapprove the final plat.

6. Once the final plat has been approved by the Board and the Chair's signature is affixed thereon, it shall be retained by the Planning Department and filed by that Department with the Rockingham County Registry of Deeds within twenty (20) working days, provided that all appropriate fees have been paid by the applicant. The applicant shall have the required site plans pre-approved by the Registry of Deeds prior to submitting mylars to the Planning Department for signature and recording.

7. The Planning Board Chair and the Vice-Chair are authorized to sign at their discretion plats which show a lot line change provided:

    a. there is no increase in the number of lots;

    b. the resultant lot dimensions and area are in conformance with the Zoning Ordinance and these Subdivision Rules and Regulations; and

    c. direct abutters have been given notice of the lot line change and have not requested to be heard.

    Nothing shall compel the Chair or Vice-Chair to sign a plat for a Lot Line Change when in their opinion the public interest would be better served through a review by the full Board.

E. Approval Expiration and Extension

1. All stipulations of subdivision approval, including recording of the plat as required by the Planning Department, shall be completed within 6 months of the date of approval by the Planning Board.

2. The Planning Director may grant an extension of up to 6 months if he determines that the applicant has been unable to complete a stipulation due to circumstances beyond the applicant's control.

3. The applicant may apply to the Planning Board for an extension of the time for completion, which shall not exceed 18 months from the original date of Planning Board approval of the subdivision.

4. If all stipulations have not been completed or the plan has not been recorded within the time required under paragraph 1 above, or within an extended time under paragraph 2 or 3 above (if applicable), the Planning Board's approval shall be deemed null and void.

F. Certification of Final Approval

1. Where the Planning Board has granted subdivision approval subject to conditions, such approval shall become final upon certification by the Planning Director that the applicant has satisfactorily complied with the conditions imposed.

2. Within 14 days of a final subdivision approval, the Planning Director shall forward to the Assessor a digital copy of the approved plan and a copy of the certification of final approval..

G. Post-Approval Procedures

1. Administrative Approval of Minor Plan Amendments

   After approval of the final plat by the Planning Board, the owner may request, in writing, approval of minor amendments. The Planning Director may approve the amendment in writing or may require review by the TAC or the Planning Board. The amended plat shall filed in the Registry of Deeds. Such amended approval shall not extend the time period for completing stipulations of the original approval.

2. Minor Field Modifications to Required Improvements

   If at any time before or during the construction of the required improvements the applicant demonstrates to the satisfaction of the Public Works Department that unforeseen conditions make it necessary or preferable to modify the design of the required improvement, the Public Works Department may authorize modifications provided that the modifications do not amount to a waiver or substantial alteration of the function of any improvements required by the Board.

SECTION IV - REQUIREMENTS FOR PRELIMINARY PLAT

Whenever the preliminary plat includes more than two proposed lots, new streets, utility mains, pumping stations, or any other major improvement, the plat must be prepared and certified by an engineer registered in New Hampshire. The following items shall be included on the preliminary plat:

1. Name and address of record owner, any option holders, descriptive name of subdivision, and name of person who prepared the plat.

2. Names and addresses of all adjoining property owners.

3. North point, date, and bar scale.

4. Zoning classification(s).

5. The scale of the layout, not to be smaller than one hundred (100) feet to an inch and where possible, shall be compatible with the scale of the City's tax assessor maps. The plat shall also include a location map to be drawn at a scale of 1" = 1,000' showing the property being subdivided and its relation to the surrounding area within a radius of 2,000'. Said location map shall delineate all streets and other major physical features that may either affect or be affected by the proposed development.

6. The location and approximate dimensions of all existing and proposed property lines including the entire area proposed to be subdivided, the areas of all proposed lots, and any adjacent parcels in the same ownership.

7. Dimensions and area of any and all property to be dedicated or reserved for schools, parks, playgrounds, or other public purpose.

8. Location, names, and present widths of all adjacent streets, with a designation as to whether public or private and approximate location of existing utilities to be used. Curbs and sidewalks shall be shown.

9. Location of significant physical features, including bodies of water, watercourses, wetlands, railroads, important vegetation, stone walls and soils types that may influence the design of the subdivision.

10. Proposed locations widths and other dimensions of all new streets and utilities including water mains, storm and sanitary sewer mains, catch basins and culverts, street lights, fire hydrants, sewerage pump stations, etc. When required by the Board, the plat shall be accompanied by profiles of proposed street grades, including extensions for a reasonable distance beyond the subject land; also grades and sizes of proposed utilities.

11. For subdivisions involving greater than five (5) acres or fifty (50) lots, the preliminary plat shall include base flood elevation data (i.e. elevation of the flood hazard zone boundary).

12. For subdivisions of five (5) lots or more, or at the discretion of the Board otherwise, the preliminary plat shall show contours at intervals no greater than two (2) feet. Contours shall be shown in dotted lines for existing natural surface and in solid lines for proposed final grade, together with the final grade elevations shown in figures at all lot corners. If existing grades are not to be changed, then the contours in these areas shall be solid lines.

SECTION V - REQUIREMENTS FOR FINAL PLAT

The final plat shall be drawn on mylar by a registered professional engineer or by a registered land surveyor. the size of the final plat shall not exceed 22" x 34". The plat shall include the following information or meet the following standards:

1. Name and address of record owner, any option holder, engineer or surveyor, and descriptive name of subdivision.

2. Names and addresses of all abutting property owners within two hundred (200) feet, locations of building within one hundred (100) feet of the parcel, and any new house numbers within the subdivision.

3. North point, date, dates of any revisions, and bar scale.

4. Zoning classification and minimum yard dimensions required.

5. The scale of the layout shall not be smaller than one hundred (100) feet to an inch. The plat shall also include a location map at a scale of 1" = 1,000' showing the property being subdivided and its relation to the surrounding area within a radius of 2,000 feet. Said location map shall delineate all streets and other major physical features that may either affect or be affected by the proposed development.

6. Dimensions and areas of all lots and any and all property to be dedicated or reserved for schools, parks, playgrounds, or other public purpose. Dimensions shall include radii and length of all arcs and calculated bearing for all straight lines.

7. Location, names and present widths of all adjacent streets (including curbs and sidewalks) with a designation as to whether public or private.

8. Location of significant physical features, including bodies of water, watercourses, wetlands, railroads, important vegetation, stonewalls, and soil types.

9. Proposed locations and profiles of all proposed streets and utilities, including water mains, storm and sanitary sewer mains, catchbasins and culverts, together with typical cross sections. Profiles shall be drawn to a horizontal scale of 1" = 50' and a vertical scale of 1"=5', showing existing centerline grade, existing left and right sideline grades, and proposed centerline grade.

10. Dates and permit numbers of all necessary permits from governmental agencies from which approval is required by Federal or State law.

11. For subdivisions involving greater than five (5) acres or fifty (50) lots, the final plat shall show hazard zones and shall include base flood elevation data for flood hazard zones.

12. For subdivisions of five (5) lots or more, or at the discretion of the Board otherwise, the final plat shall show contours at intervals no greater than two (2) feet. Contours shall be shown in dotted lines for existing natural surface and in solid lines for proposed final grades, together with the final grade elevations shown in figures at all lot corners. If existing grades are not to be changed, then the contours in these areas shall be solid lines.

13. Location of all permanent monuments.

SECTION VI - GENERAL REQUIREMENTS

The following shall be considered as minimum requirements and will be varied by the Board only under the conditions and circumstances set forth in these regulations.

1. Basic Requirements

A. Conformity to Official Plan or Map

The subdivision shall be in harmony with the Master Plan and/or Official map of the City.

B. Hazards

The land to be subdivided shall be of such character that it can be used safely without danger to health or peril from fire, flood, soil failure, or other hazard.

C. Relation to Topography

The street plan of a proposed subdivision shall bear a logical relationship to the topography of the property, and all streets shall be arranged so as to obtain as many of the building sites as possible at or about the grade of the streets. Grades of streets shall conform as closely as possible to the original topography.

D. Planned Unit Development

The Planning Board may approve a planned unit development provided such development is consistent with the Zoning Ordinance of the City of Portsmouth, Article 7 – Flexible Development, Sections 10.710 and 10.720.

2. Lots

A. Lot Arrangement

In all quadrangular lots, and so far as practicable all other lots, the side lines shall be at right angles to straight street lines or radial to curved street lines. An arrangement placing lots at right angles to one another shall be avoided where practicable.

B. Lot Sizes

Lot dimensions shall conform to the requirements of the Zoning Ordinance of the City of Portsmouth. Corner lots shall have at least 10% extra width to permit appropriate building setback from the orientation to both streets.

C. Commercial and Industrial Lots

Depth and width of properties reserved or laid out for commercial and industrial purposes shall be adequate to provide for the off-street service and parking facilities required by the type of use and development planned.

3. Streets

A. Relation to Adjoining Street System

Insofar as the Master Plan or official map does not indicate the size, location, direction and extent of a street, and subject to the regulations hereinafter specified regarding definite minimum widths, the arrangements of streets in a subdivision shall provide for the continuation of the principal streets existing in the adjoining subdivisions, or of their proper projection when adjoining property is not subdivided, and shall be of a width at least as great as that of such existing streets. (A) Where, in the opinion of the Board, topographical conditions make such continuance or conformity impracticable, or (B) in cases where the Board itself adopts a plan or plat of a neighborhood or area of which the subdivision is a part and this plan or plat provides coordination with the street system of the City different from that of said continuations or projections of existing streets and the subdivider's plat conforms to such neighborhood or area plat or plan of Board, the Board may approve the Subdivider's plat.

Where the plat submitted covers only a part of the subdivider's tract, a sketch of the prospective future street system of the unsubmitted part shall be furnished and the street system of the part submitted shall be considered in the light of the adjustments and connections with the street system of the part not submitted.

Where a tract is subdivided into lots of an acre or more, the Board may require an arrangement of lots and streets such as to permit a later resubdivision in conformity with the street requirements specified in these regulations.

B. Street Rights-of-Way

The minimum right-of-way for main thoroughfares shall be as shown on the City's Master Plan or Official Map and shall, when not indicated on such Master Plan or Official Map, be not less than sixty (60) feet; for residential streets, fifty (50) feet. These widths shall be measured from lot line to lot line.

C. Access

There shall be no reserve strips controlling access to the streets, except where the control of such strips is definitely placed in the City under conditions approved by the Board. The subdividing of the land shall be such as to provide each lot, by means of either public street or way or permanent easement, with satisfactory access to an existing public highway or to a thoroughfare as shown on an Official Map or Master Plan.

D. Parallel Service Roads

Where a subdivision borders on or contains a railroad right-of-way, the Planning Board may require a street approximately parallel to and on each side of such right-of-way, at a distance suitable for the appropriate use of the intervening lands as for park purposes in residential districts, or for commercial or industrial purposes in appropriate district. Such distances shall also be determined with due regard for the requirements of approach graded and future grade separations.

E. Street Intersection Angles

A street shall intersect another as nearly to a ninety degree angle as possible.

F. Merging Streets

New streets which merge into existing streets may be at an angle of less than sixty (60) degrees, provided there is an adequate amount of a nearly parallel approach to the existing street, by the new street.

G. Street Deflections and Vertical Alignment

When connecting street lines deflect from each other at any one point by more than ten (10) degrees, they shall be connected by a curve with a radius adequate to insure a sight distance of not less than two hundred (200) feet for minor and collector streets, and of such greater radii as the Planning Board shall determine for special cases. Vertical alignment of streets shall be subject to approval by the Public Works Department.

H. Marginal Access Streets

Where a subdivision abuts or contains an existing or arterial street, the Planning Board may require marginal access streets, reverse frontage with screen planting contained in a now access reservation along the rear property line, deep lots with rear service alleys, or such other treatment as may be necessary for adequate protection of residential properties and to afford separation of through and local traffic.

I. Cul-de-Sacs

Cul-de-sacs shall be provided at the closed end with a drive-around roadway having a minimum radius for the outside curbs of at least fifty (50) feet, and a street property line radius of sixty (60) feet. The maximum length of a cul-de-sac shall generally be five hundred (500) feet unless otherwise approved by the Board. The Planning Board may require the dedication of an easement of twenty (20) feet in width from the cul-de sac to the next adjoining street to provide for utilities. No water lines serving the street shall be deadended, where feasible.

J. Rounding Street Corners

Whenever necessary to permit the construction of curbs having a minimum radius of twenty-five (25) feet at street corners without curtailing the sidewalk to less than normal width, the property line at such corners shall be rounded or otherwise set back sufficiently to permit such construction. Normally, the radius on the property line shall be not less than ten (10) feet. Larger radii may be required by the Board, when, in its opinion, such design is advisable.

K. Street Name Signs

(1) At all intersections street signs shall be provided and installed by the developer in conformity with the specifications of the Public Works Department.

(2) Until such time as each street is accepted by the City as a public way, the sign posts at the intersections of such street with any other street shall have affixed thereto a sign designating such street as a private way.

L. Street Names

Street names of all proposed streets shall be subject to approval by the Planning Board. No proposed street name shall duplicate the names of existing streets irrespective of the use of the suffix “street”, “boulevard”, “drive”, or “court”. The continuation of an existing street shall have the same name. Street names shall generally be chosen from a list of possible names adopted by the Planning Board.

M. Block Lengths

Intersecting streets shall be so laid out that blocks between street lines shall be not more than eight hundred (800) feet in length. In blocks over six hundred (600) feet in length, the Board may require, at or near the middle of the block, a public walk not less than fifteen (15) feet in width for foot traffic.

N. Block Widths

The width of blocks shall generally be such as to allow two tiers of lots.

O. Grade of Streets

Street grades shall not exceed six percent (6%) for all streets nor be less than one percent (1%).

P. Grass Strips

All areas between the exterior street lines which are not occupied by approved sidewalks shall be rolled, loamed and seeded in accordance with the specifications of the Public Works Department.

4. Curbing

All curves at street intersections and all curves having a radius not greater than one hundred and twenty-five (125) feet shall have the gutter line curbed with new granite curbing if required by the Public Works Department.

The type of curbing will generally be uniform on opposite side of the street and shall meet specifications set forth by the Public Works Department.

5. Driveways

All permits required for driveways and other accesses onto a State highway shall be obtained from the New Hampshire Department of Public Works and Highways prior to final approval of the subdivision. Any permits required for driveways onto local streets shall be obtained from Public Works Department prior to final approval of the subdivision. The Planning Board shall attempt to assure that the location of all driveways and accesses do not endanger safety or impede reasonable traffic flow.

6. Drainage Improvements

The Planning Board may require the subdivider to provide engineering studies on the effect of such subdivision on the existing downstream drainage facilities outside the subdivision boundaries. Where it is determined by the Public Works Department that the additional run-off incident to the development of the subdivision will over load an existing downstream drainage facility, the Planning Board may require the provision of water retarding facilities, flowage easement, or other improvements to alleviate said problem.

7. Municipal Water Service

All subdivisions shall provide municipal water service when available or required by the Planning Board. Installation of all water mains is subject to the approval of the Water Department. When City water is available and/or required the system shall be designed by a qualified engineer. Each system shall be designed to handle the expected flows (domestic & fire) for present and future development within the subdivision. Number and location of all fire hydrants shall be determined by the Fire Department.

8. Municipal Sewer Service

All subdivisions shall provide municipal sewer service when available or required by the Planning Board. Installation of all sewer mains is subject to the approval of the Water Department.

In subdivisions connecting to the municipal sewer system, each lot in the subdivision shall be provided at the property line with a connection to the public sanitary sewer system. An adequate sanitary sewer shall be designed by a professional engineer registered in New Hampshire to handle all of the present and future development incorporated in a subdivision. All new sewer systems shall conform to the Sewer Ordinance of the City of Portsmouth. The applicant shall obtain approval for the system from New Hampshire Supply and Pollution Control Commission where applicable, prior to final approval of the subdivision.

9. Installation of Utilities

A. <u>All Districts</u>:

All electric, telephone, and other utility distribution lines shall be installed underground per specifications of the public utility companies involved, and there shall be provided by the developer such easements as are required for transformer units. Both the landscaping and the location of all utility distribution lines and any such transformer areas shall be as approved by the Planning Board and shall be in accord with the following requirements:

1. Detailed plans for all utility transmission lines and transformer areas within the subdivision shall be supplied to and accepted by the Public Works Department prior to the filing of an application for Final Subdivision Approval from the Planning Board.

2. All such plans shall have been designed and approved by the appropriate utility company or, if not designed by the utility company, that the company has approved the design being submitted.

3. In conjunction with the filing of the application for Final Subdivision Approval, the applicant shall demonstrate to the Planning Board that all necessary easements or licenses, which are required from the City, have been requested and are being considered by the Department of Public Works.

B. <u>Indicator Tape</u>

Indicator tape shall be installed in all residential, commercial, and industrial areas over all underground utility mains and services. Metallic type shall be utilized over non-metallic materials.

10. On-Site Water Supply

In subdivisions not designed to be served by municipal water service, the provision of on-site water supply shall conform to Water Supply and Pollution Control Commission criteria and be subject to approval by the Planning Board. It shall be the responsibility of the subdivider to provide adequate information to prove that the area of each lot is adequate to permit the installation and operation of both individual on-site water supply and sewage disposal systems.

11. On-Site Sewage Disposal Systems

No subdivision of land will be approved where it creates a lot that will not meet the minimum standards imposed by the State of New Hampshire Water Supply and Pollution Control Commission and requirements listed below unless connected to a municipal sewer system.

All subsurface sewage disposal systems must be designed by a professional engineer registered in New Hampshire and constructed in accordance with the most recent edition of the manual on "Guide for the Successful Design of Small Sewage Disposal Systems" as published by the New Hampshire Water Supply and Pollution Control Commission.

Each proposed lot shall have a test pit on the proposed site for the leaching bed on each proposed lot. The Planning Board may request that the City Engineer verify any test pits. Approval for each lot's test pit shall be obtained from New Hampshire Water Supply and Pollution Control Commission and from the Public Works Department prior to final approval of the subdivision.

12. Open Space

A. Natural Features

The subdivision shall, whenever possible, preserve in their natural condition important natural features. The Planning Board may request an advisory opinion from the Portsmouth Conservation Commission in the determination of the value of natural features and the boundaries of such natural systems. Such areas include large or unique trees or groves, water courses or important wetland areas. Natural features that provide buffers between lots, or sections, of a subdivision should be preserved to enhance privacy, and esthetic value.

B. Buffer Strips

The Planning Board may require the designation of buffer strips of at least fifty (50) feet width around surface water, wetlands, or other natural features which may be adversely affected by erosion or stormwater runoff. The Planning Board may require a vegetative buffer to provide screening where non residential developments abut a residential zone.

C. Parks

Where a small park or other neighborhood recreational open space shown on an official map or on a plan made and adopted by the Board is located in whole or in part in the applicant's subdivision, the Board may require the dedication or reservation of such open space within the subdivision for park, playground or other recreational purposes, in those cases in which the Board deems such requirements to be reasonable.

The Board shall also require of the developer that he supply and plant such trees and shrubbery as are deemed compatible to the environmental design of the neighborhood. It shall also be stipulated by covenant upon the plan that such open spaces shall not contain signs other than street directional or place-name signs and that upon approval of the final plans and plantings, the maintenance of said landscaped areas shall be the responsibility of the community.

D. Tree Planting

The planting of shade trees within all developed lots where residential, commercial, or industrial development is to take place, shall be required of the developer who shall supply planting plans in triplicate to the Planning Board and Public Works Department. The planting plans of shade trees within proposed or accepted rights-of-way must be submitted to the Public Works Department and the Chairman of the Portsmouth Conservation Commission and receive their approval before planting of street trees is begun.

13. Flood Hazard Areas

Subdivisions involving land designed as flood hazard areas shall be reviewed to determine whether such proposals will be reasonably safe from flooding and shall meet the following requirements:

A. Permits

Prior to preliminary approval, the Planning Board shall review the proposed development to assure that all necessary permits have been received from those government agencies from which approval is required by Federal and State law including Section 404 of the Federal Water Pollution Control Act Amendments of 1972, 33 U.S.C. 1334.

B. Minimization of Flood Damage

Sufficient evidence (construction drawing, grading and land treatment plans) shall be submitted so as to allow the Planning Board to determine that:

(1) All such proposals are consistent with the need to minimize flood damage;

(2) All public utilities and facilities, such as sewer, gas, electrical, and water systems are located, and constructed to minimize or eliminate flood damage;

(3) Adequate drainage is provided so as to reduce exposure to flood hazards; and,

(4) New and replacement water and sewer systems (including on-site site systems) are located, designed, and constructed to minimize infiltration and avoid impairment.

C. Elevation and Flood-Proofing Records

The subdivider shall obtain and maintain records of elevations and floor-proofing levels for all new are substantially improved structures, whether or not such structures contain a basement.

D. Alteration of Watercourses

The NH Department of Environmental Services Wetlands Bureau shall be notified prior to any alteration or relocation of a watercourse and copies of such notifications shall be submitted to the Planning Board. The flood carrying capacity shall be maintained within the altered or relocated portion of any watercourse.

14. Erosion and Sedimentation Control

Stripping of vegetation, regrading or other development shall be done in such a way that will minimize soil erosion. Whenever practical, natural vegetation shall be retained, protected, and supplemented. Temporary vegetation or mulching may be required by the Board where considered necessary.

Where determined necessary by the Planning Board, the applicant shall prepare a plan for minimizing soil erosion and sedimentation during construction and operation of the proposed development. This plan shall consist of:

(1) Drawings showing the natural drainageways on the site and surrounding area;

(2) The various measures proposed for the control of erosion and sediment and their relative location;

(3) Specifications, construction details and calculations for each proposed soil erosion and sediment control measure; and,

(4) A timing schedule indicating the anticipated starting and completion dates of the measures and the sequence and time of exposure of each area, prior to the completion of effective measures.

In reviewing such a plan, the Planning Board shall consider objectives including, but not limited to , the following:

(1) The disturbed area shall be kept to a minimum;

(2) Provisions shall be made to accommodate the increased run-off caused by changed soil and surface conditions during and after development;

(3) Sediment in the runoff water shall be trapped and retained on the project area;

(4) Off-site surface water shall either be diverted around or conduced safely through the project area; and,

(5) Disturbed areas shall be protected from erosion during winter months.

15. Easements

A. Utilities

Except where alleys of not less than twenty (20) feet are provided for the purpose, the Board may require easements, not exceeding ten (10) feet, on each side of all rear lot lines, and on side lot lines where necessary or, in the opinion of the Board, advisable, for poles, wires, conduits, storm and sanitary sewers, gas, water and heat mains or other utility lines. Easement of the same or greater width may be required along the lines of or across lots where necessary for the extension of the existing or planned utilities.

If in the opinion of the Board the most suitable and reasonable locations for any of the utilities, such as sewers, storm drains, water and gas pipes and electric pole lines and conduits, which are likely to be required within a subdivision, either for the service thereof or for service for areas in the surrounding territory, do not lie wholly in the streets, including alleys if any, shown on the plat, the Board may require, insofar as reasonable, provision to be made for the location of such utilities on routes elsewhere than within said streets, either by the dedication of public interest in the proper location of said utilities.

B. Drainage

Where a subdivision is traversed by a watercourse, drainage way, channel or stream, the Planning Board may require a storm water easement or drainage right-of-way of at least (20) feet in width.

16. Monuments

Monuments shall be placed at all block corners, angle points of curves in streets, and at such intermediate points as shall be required by the Public Works Department. The monuments shall be of such material, size, and length as may be fixed as a standard by, or approved by, the Public Works Department.

17. Benchmarks

A permanent reinforced concrete marker shall be placed at the edge of each road boundary at their terminus of the subdivision as reference for all locations and elevations and every 2,500 (twenty-five hundred) feet within the subdivision or at other locations specified by the Public Works Department. All benchmarks shall be in reference to a U.S.G.S. survey.

18. House Numbers

All structures and dwellings (but not accessory buildings) shall be numbered by the developer in accordance with City Ordinance, Chapter 11, Article V, Section 11-502.

SECTION VII - DESIGN STANDARDS

1. Streets

The laying out and construction of all streets within subdivisions shall be in conformity with those ordinances of the City of Portsmouth pertaining to such development and in addition shall meet the following construction and material specifications. Where not specified below, street construction shall follow the practices outlined in the latest edition of the State of New Hampshire Standard Specifications for Road and Bridge Construction. Streets shall conform to the cross-sections attached to this section.

A. Clearing

The entire area of each or way shall be cleared and cleaned of all stumps, brush, roots, boulders, like material and all trees not intended for preservation, and will not be used for fill. Ledge occurring anywhere in the full cross-section of the roadway must be cleared to a minimum depth of eighteen (18) inches below the finished surface. Ledge occurring in pipe tenches must be cleared so as to have a gravel cushion of at least one (1) foot below and both sides of the pipe.

B. Excavation

All loam, soft clay, and other yielding material shall be removed or stripped from the roadway area to a depth of no less than twenty (20) inches below the finished grade, and/or to a depth that may be required by the Director of Public Works.

C. Rough Grade and Preparation of Sub-Grade

The excavated area shall be back-filled to the subgrade and shoulder elevation with suitable backfill, rough graded and compacted to sub-grade and shoulder elevations. The sub-grade shall be shaped to a true surface conforming to the proposed cross section of the road and thoroughly compacted before applying the gravel.

D. Base Course

The base course area shall be deemed to include travel way and shoulder areas and shall consist of a course of bank-run gravel of twelve (12) inch minimum depth, unless the Director of Public Works determines that ground conditions warrant greater depth for either course.

The base course shall not be constructed during freezing weather or on a wet or frozen sub-grade. Blading and rolling shall be required to provide a smooth, even and uniformly compacted course true to cross-section and grade. A minimum slope of the finished base course shall be one-quarter (1/4) inch per foot or as may be required on curves or on super elevations. At all times during construction, the sub-grade and all ditches shall be constructed and maintained so that the bed will be effectively drained to prevent erosion.

All compaction shall be at ninety-five percent (95%) density in accordance with AASHTO T 99.

E. Street Paving

Street paving shall be accomplished by placing a minimum of two (2) courses of hot asphalt concrete which shall be placed with a self-propelled spreader and in accordance with the specifications and conditions stated in the State of New Hampshire Department of Public Works and Highways standard specifications for road and bridge construction, adopted and approved, latest edition.

If a significant time interval occurs between the successive passes of the paving machine, the contractor must use a joint heater to insure a better bond. No paving will be done between November 15 and April 15. In all cases, the temperature of the day must be forty (40) degrees and rising before asphaltic concrete mixture (Type 1) can be applied.

F. Side Slopes

Side slopes shall not exceed one (1) foot vertical rise per every two (2) feet horizontal length without retaining or other special considerations. Erosion prevention measures might be required until permanent growth is established.

G. Approval and Specifications

All material shall be secured from sources approved by the Director of Public Works. Samples of all materials to be used in the project shall be submitted to the Director of Public Works upon request.

All materials shall conform to the latest edition of the State of New Hampshire Department of Public Works and Highways Standard Specifications for Road and Bridge Construction or to City requirements if more stringent.

H. Curbing

(1) Granite Curbs

Granite curbs where specified on the typical cross-sections and where required by the Director of Public Works shall conform to the following nominal dimensions and shall not have rust stains: straight granite curb, 5" x 18” x 48" minimum length; slope granite curb 4 ½" x 13" x 48" minimum length. Curb shall be bedded on and surrounded by a minimum 6" layer of gravel. Complete compaction shall occur in all areas and under the entire length of curb.

I. Sidewalks

The sub-base for a sidewalk shall be at least twelve inches (12") of bank-run gravel, thoroughly compacted. All stones larger than three inches (3") in diameter shall be removed. Bituminous concrete shall be laid in two (2) courses; namely base course and top course. Base course shall consist of one and one-half inches (1½") of binder after rolling. In no case shall the surface be laid until the sub-base has been inspected and approved. Concrete sidewalks shall not be less than four inches (4") in thickness reinforced by 6 x 6 - 6 x 6 wire mesh, placed on the same base.

J. Inspection and Methods

The Department of Public Works shall regularly be notified to inspect all road and utility construction and materials used.

2. Storm Water Sewers and Other Drainage Appurtenances

All areas of a subdivision shall be graded to prevent flooding of structures and roads or eroding of property. Storm sewers and other drainage appurtenances shall be constructed throughout the entire subdivision to carry off water from all inlets and catch basins, and be connected to an adequate outfall. The storm drainage system shall be separate and independent of the sanitary sewer system and shall be in accordance with drainage laws of the State of New Hampshire. Included in the overall design shall be any work necessary in order to provide adequate and satisfactory drainage along the side of any existing street which is adjacent to the subdivision. The plans and specifications for the disposing of storm water and the construction thereof shall be approved by the Public Works Director. Manholes will be required upon request, to be located between catchbasins at all points where there is a change of grade, change of alignment, or an intersection, and shall not be spaced greater than 300 feet apart.

A. Design

(1) Proper sizing of culverts, pipes, etc. shall be acceptable established engineering practice.

(2) Design storm frequency:

a. Major streams, rivers, bridges, culverts	50 year storm or flood of record
b. Minor brook culverts	15 year storm
c. Storm sewers	10 year storm

(3) A sample set of the calculations used in sizing the various pipes and a list of the variables used must be submitted to the Public Works Director. Failure to include this information could result in a delay of the review process.

B. Standards of Construction

(1) All improvements shall meet the specifications of AASHTO (American Association of State Highway and Transportation Officials) and the N.H. Standards Specifications for Road and Bridge Construction in regards to material and strength requirements.

(2) Drain catch basins or manholes shall have a minimum of 3-foot stumps. All drain manhole covers shall be heavy duty, of 30-inch diameter, and identified as “drain”.

(3) Minimum size pipe for drains and culverts shall be twelve (12) inches in diameter.

(4) All pipes shall be reinforced concrete pipe of sufficient strength for the given application. Drainage pipes shall have a minimum of three (3) feet of cover where ever possible.

(5) Culvert Headwalls/Endwalls when required shall be either concrete or mortar rubble masonry.

3. Sanitary Sewers

A. Design

In subdivisions connecting to municipal sewer system, the construction of the sewer system shall conform to the approved plans and specifications and all work must be properly inspected and approved by the Public Works Department. In general, the design of municipal sewer lines shall follow the guidelines presented in the Water Pollution Control Federation Manual of Practice No. 9.

A manhole shall be installed at each change of alignment on the pipe and/or beginning or end, as well as at each change of grade at intervals not to exceed three hundred (300) feet. Manhole frames and covers shall be of heavy duty type. Manholes shall be watertight.

B. Lift Stations

The Department of Public Works shall provide typical lift station plans. Data shall be provided by a registered engineer for estimating design flows before equipment selection. Final approval of the type of station shall be specified by the Department of Public Works. All manuals pertaining to said lift station (i.e. operation, service guaranty) shall be turned over to the City upon acceptance. The decision to accept any sewer lift station is entirely a city option, and shall be based on the recommendations of the City Engineer, Director of Public Works, and the Planning Board. General requirements for lift stations include, but not limited to: fencing of the installation, a permanent above ground building for stand-by-power, flow recording equipment, maintenance supplies and tools, etc., and an approved primary screening device or communicator devices located in the wet well.

C. Materials

Materials selected for sewer construction shall be of the following types:

Pipe - Reinforced concrete, not recommended; asbestos-cement-Class 3300 minimum; ductile iron, force mains and heavy loads; PVC, schedule 40 minimum with cement joints is not allowed.

Manholes - May be precast concrete section construction with approved joint sealing system between sections and for incoming and outgoing pipes. Manhole covers shall be heavy duty type (N.H. Standard 30" diameter), identified as “sewer”.

Sewer Services - At main to be wyes. If tapped, must use cast iron sewer saddles (of approved design).

D. Construction Standards

Construction standards shall be clearly emphasized in the specifications and attention shall be directed to the bedding material and backfill requirements. Suitable compaction under, around and above of pipes will be required. All lateral connections shall be made through the use of wyes installed during initial construction. All manholes shall be made watertight and have brick inverts. All joints between pipes and between manhole section shall be of and adequate locking type to prevent water seepage in or out of the system.

All pipes shall be sized and have proper bearing material under them. All trenches shall be opened by the developer for inspection before and after pipe is bedded and laid. When asbestos cement pipe is used, wyes shall be supplied in the main. All joints shall be tight fitting and sealed. Inspections shall be completed in the normal work day within a twenty-four (24) hour period after notification. Minimum slope of a sanitary sewer shall be established to maintain a minimum average velocity of two (2) feet per second.

4. Water Mains and Fire Hydrants

A. Connections to Lots

When City water is supplied, each lot shall have a separate connection brought to the lot line, equipped with an outside stop, and capped until ready to use. All house service lines shall be connected to the main by the use of tapped couplings. The developer shall provide ties for the end of the service line and the outside stop to the Director of Public Works for each lot in the development (also the same for sewer laterals).

B. Design and Construction

Water mains, services, fire hydrants, and other appurtenances shall be designed, constructed, and installed according to Portsmouth Water Department Standards.

C. Materials

All materials shall meet the requirements or specifications set forth by the Portsmouth Water Department.

D. Notification Prior to Construction

The Director of Public Works shall be notified at least forty-eight (48) hours prior to any construction involving water mains. All new pipes shall be inspected and tested in accordance with Portsmouth Water Department requirements.

SECTION VIII - FINAL PLAN REQUIREMENTS

A. Submission Requirements

In order to facilitate the on-going development and maintenance of the City's Geographic Information Systems, these regulations require applicants to submit, in addition to a recordable mylar, a digital format the final plan including but not limited to, subdivision plan, lot line relocation plan or lot line verification plan, that conforms to City specifications.

1. Waiver of the requirement to submit a plan in a digital format may be granted by a two-thirds vote of the full membership of the Planning Board.

B. Specifications

Electronic Data: Acceptance of the digital version of the final plan shall be based on the following:

1. Data format shall include digital parcel lines parcel areas, public easements, utility easements and when buildings outlines are surveyed these shall be included as well.

2. Data shall be submitted on a CD or DVD. Media shall be in a format compatible with AutoCAD or ESRI software, i.e. DWG, DXF, shapefile, personal geodatabase, or ARC/INFO export format (E00).

3. Files shall be geo-referenced to New Hampshire State Plane Coordinates and shall be expressed in feet.

4. All submitted disks shall be labeled with the following information:

    i. Project Name;
    ii. Applicant Name(s);
    iii. Data File Names;
    iv. Property Owner Name;
    v. Tax Map and Lot Number;
    vi. Date (month, day and year).

5. If, additional plan review should be required; the applicant shall complete outstanding requirements and provide the City with updated plans.

SECTION IX - DEVELOPMENT PREREQUISITE TO FINAL APPROVAL

1. Improvements and Installation Bonds

The Board will consider approval of the final plat for record only after monuments have been installed in accordance with the specifications given hereunder and after there shall have been filed with the Board:

A certificate from the Director of Public Works that all streets shown on the plat have been graded and approved, and all sewerage, water utilities, curbing, and street markers have been installed in accordance with the City specifications and all lands dedicated as open areas or public land and a duly completed and executed bond issued by a surety company authorized to do business in the State of New Hampshire, certified by the City Attorney as valid and enforceable by the City Attorney and in the amount and with surety satisfactory to the Board, securing the making installation of these improvements, utilities, and facilities within the period fixed by the Board; or

A certified check, drawn on an approved bank and available to the City and adequate for the completion of these improvements utilities and facilities.

Said bond or certified check shall be in the amount representing one hundred percent (100%) of the cost for the completion of the streets and the installation of the sewer and water utilities and facilities according to the specifications given hereunto. Upon inspection of a partial completion of a subdivision, the City Manager may authorize, in writing, a pro-rated reduction in the certified check or performance bond; but in no case shall more than fifty percent (50%) of said performance bond or said certified check be released until the entire subdivision has been completed to the satisfaction of the Board and written approval by said Board has been executed.

2. Maintenance Bonds

The Board will consider approval of the final plat for record only after there shall have been filed with the Board, a surety bond or certified check covering maintenance of roads and other improvements for a period of two (2) years from the date of completion, in an amount not to exceed twenty-five percent (25%) of said cost of improvements. If repair or unusual maintenance is needed or additional improvements required, then such costs as are necessary shall be drawn against said surety.

SECTION X – WAIVER OF REGULATIONS

1. The Planning Board may waive any provision of these Regulations by a vote of six members, provided that such waiver will not have the effect of nullifying the spirit and intent of the Master Plan or these Regulations.

2. In granting a waiver, the Planning Board may require such conditions as will in its judgment secure the objectives of these Rules and Regulations.

SECTION XI – AMENDMENTS

The Planning Board may amend these Rules and Regulations as it deems necessary or advisable at any meeting by a majority vote of the full membership of the Board. Such action shall follow a public hearing for which notice has been given at least 10 calendar days before the hearing in accordance with RSA 675:7.

INDUSTRIAL STREET MINIMUM STANDARDS

(Not To Scale)

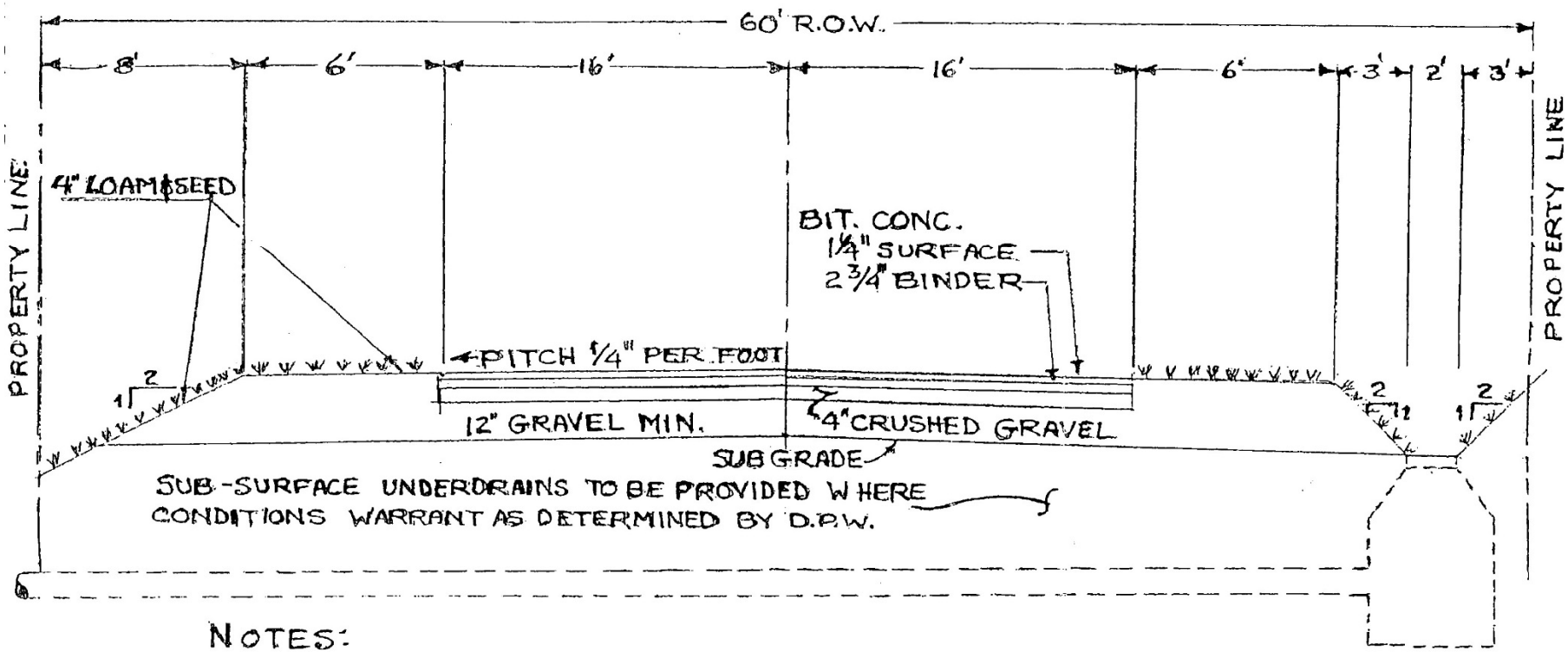

NOTES:

1. 12" GRAVEL BASE INCREASES IF GROUND CONDITIONS WARRANT
2. STREET SIDEWALKS TO BE PROVIDED AS DESIGNATED BY THE SITE REVIEW COMMITTEE.
3. 12"x4½" MIN. SLOPED GRANITE CURB AT 45° WITH 3" REVEAL MAYBE REQUIRED IF SITE CONDITIONS WARRANT.

COMMERCIAL STREET MINIMUM STANDARDS

(Not To Scale)

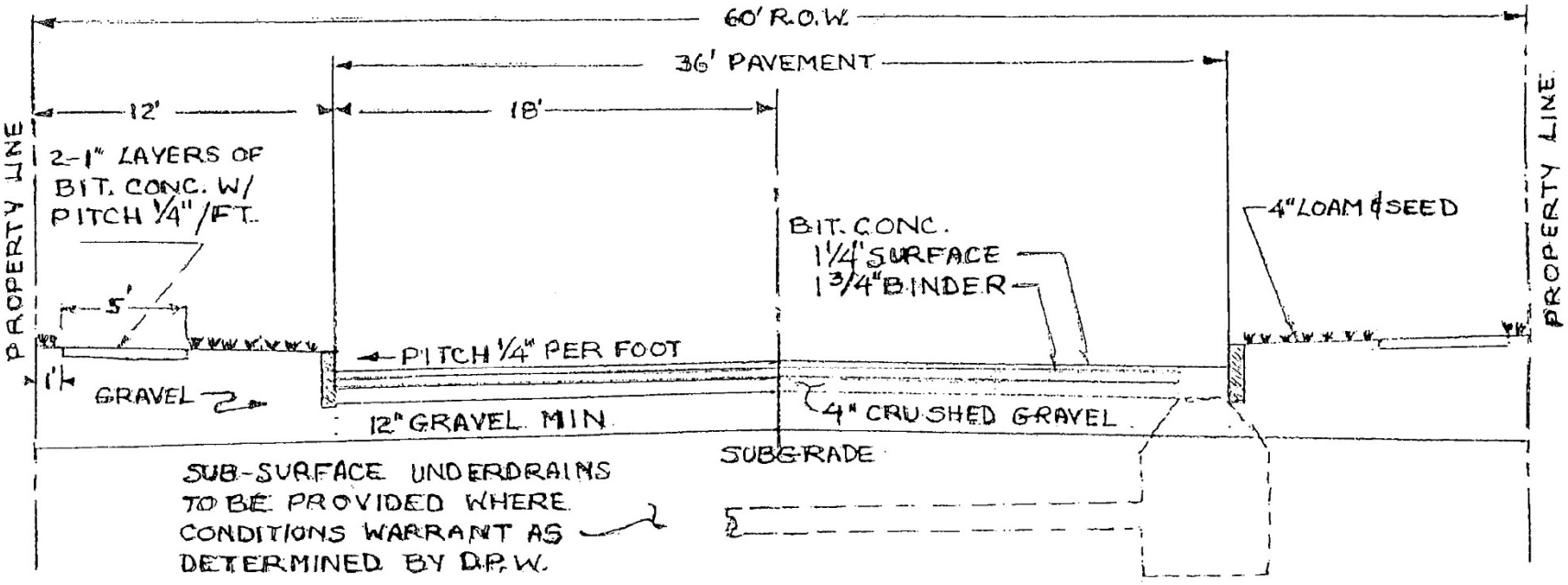

NOTES:

1. 12" GRAVEL BASE INCREASES IF GROUND CONDITIONS WARRANT
2. VERTICAL 18"×6" GRANITE CURB WITH 8" REVEAL
3. SIDEWALKS REQUIRED AS DESIGNATED BY SITE REVIEW COMMITTEE.

RESIDENTIAL STREET MINIMUM STANDARDS

(Not To Scale)

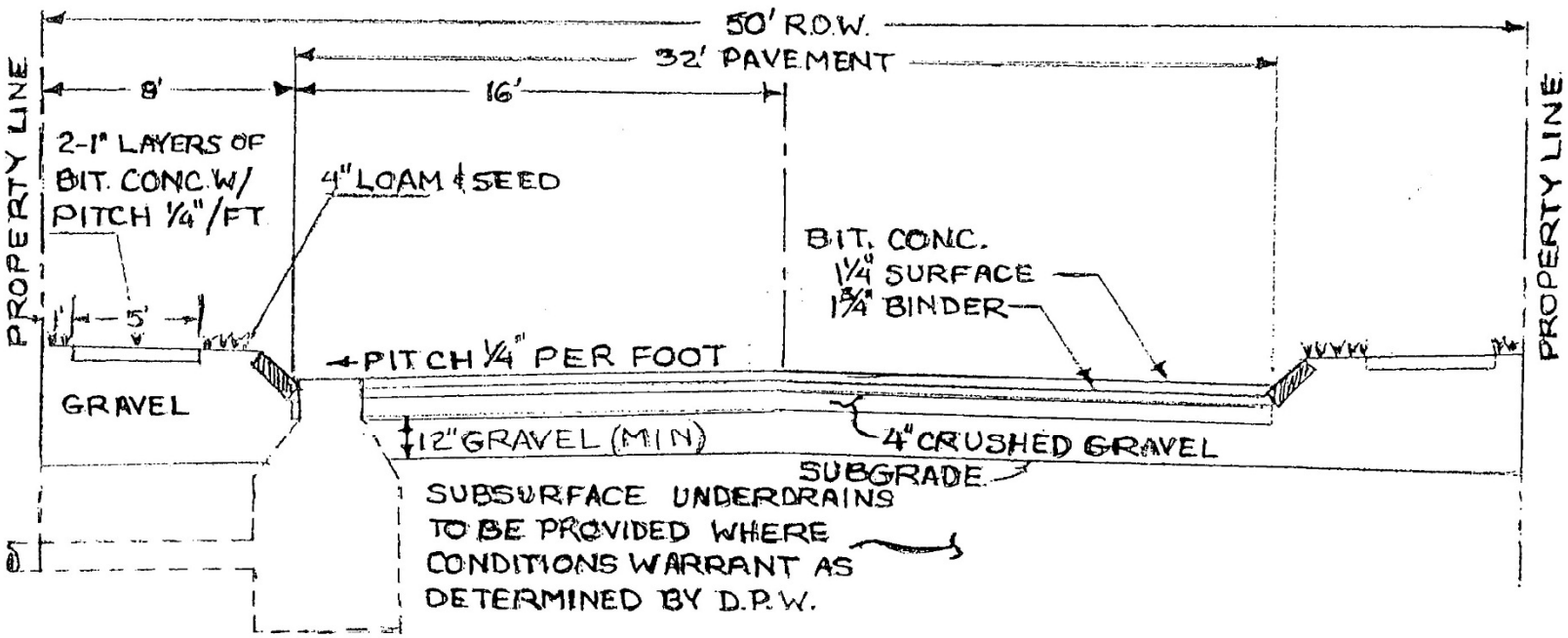

NOTES:

1. 12" GRAVEL BASE INCREASES IF GROUND CONDITIONS WARRANT.
2. GRANITE CURB OF 13"×4 1/2" MIN. SLOPED AT 45° WITH 8" VERTICAL REVEAL
3. SIDEWALKS REQUIRED AS DESIGNATED BY SITE REVIEW COMMITTEE

Appendix B

Storm System Mapping

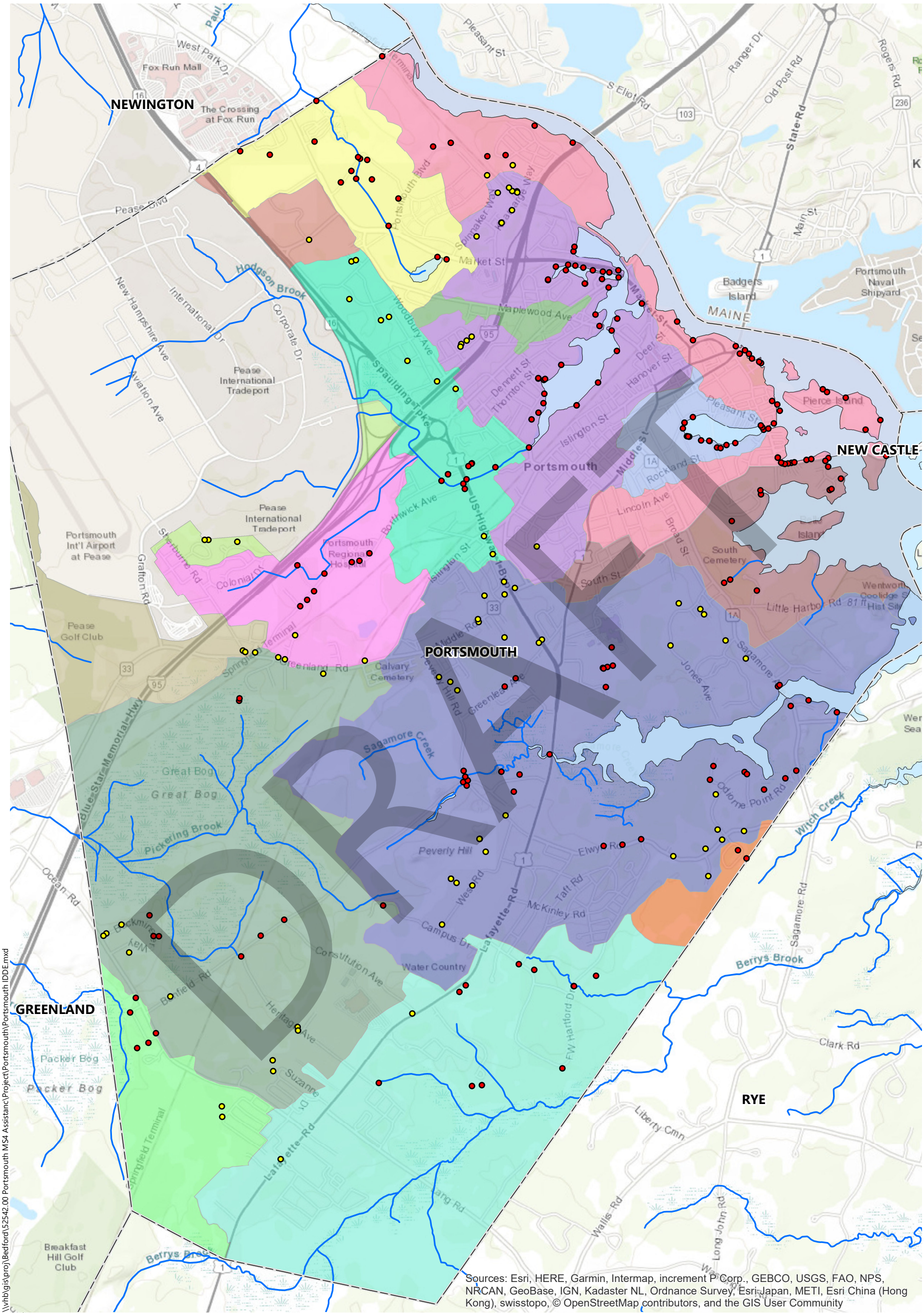
NEWINGTON
PORTSMOUTH
NEW CASTLE
GREENLAND
RYE
DRAFT
Sources: Esri, HERE, Garmin, Intermap, increment P Corp., GEBCO, USGS, FAO, NPS, NRCAN, GeoBase, IGN, Kadaster NL, Ordnance Survey, Esri Japan, METI, Esri China (Hong Kong), swisstopo, © OpenStreetMap contributors, and the GIS User Community
0 0.225 0.45 0.9 Miles
Portsmouth MS4 | Portsmouth, NH | Outfall Prioritization & Waterbodies
Priority
Excluded (0)
High Priority (195)
Low Priority (86)
MS4 "Problem" (0)
Watersheds
Albacore
Back Channel
Berrys Brook
Borthwick Avenue Brook
Grafton Ditch
Haines Brook
Lower Hodgson Brook
Lower Piscataqua River - South
North Mill Pond
Pickering Brook
Sagamore Creek
South Mill Pond
Unnamed Brook - To Piscataqua River
Unnamed Brook - To Unnamed Marsh
Upper Hodgson Brook
Witch Creek
Stream/River
Waterbody
City Boundary

Appendix C

Field Forms, Sample Bottle Labels, and Chain of Custody Forms

Appendix D

Water Quality Analysis Instructions, User's Manuals and Standard Operating Procedures

Appendix E

IDDE Employee Training Record

Illicit Discharge Detection and Elimination (IDDE)
Employee Training Record

Portsmouth, New Hampshire

Date	Type of Training	Participant Organizations

Name	Title	Signature

Appendix F

Source Isolation and Confirmation Methods: Instructions, Manuals, and SOPs

Appendix E

IDDE Inspection Results and Data

Appendix F

Operations and Maintenance (O&M) Plan

Operations and Maintenance (O & M) Plan

The City of Portsmouth

680 Peverly Hill Road, Portsmouth, New Hampshire 03801

EPA NPDES Permit Number *NHR041027*

August 2025 Update

Table of Contents

INTRODUCTION 1
BMP 6-1: Parks and Open Space 2
Turf Management and Landscaping 3
Nitrogen Impairment Requirements 4
Trash Container Management 4
Pet Waste 5
Waterfowl Congregation 5
Erosion and Poorly Vegetated Areas 5
BMP 6-2: Building and Facilities 6
Best Practices and Standard Operating Procedures 7
Trash and Waste Management (See Best Practices under Parks and Open Spaces) 7
Turf Management (see Best Practices listed under Parks and Open Space) 7
Chemical and other Material Storage 7
BMP 6-3: Vehicles and Equipment Storage and Maintenance 7
Vehicles Fueling Areas 7
Best Practices / Preventative Measures 7
Vehicle Storage / Maintenance 7
Vehicle Fueling 8
Vehicle Washing 8
Stormwater Infrastructure Operations and Maintenance 8
BMP 6-4: Street/Parking Lot Sweeping 8
BMP 6-5: Catch Basin Cleaning 10
City's Catch Basin Cleaning Practices 10
BMP 6-6: Stormwater Treatment BMP Inspection and Maintenance 12
Inspection and Maintenance Procedures 12
Vegetated Stormwater Treatment BMPs 12
Other Stormwater Treatment BMPs 13
BMP 6-7: Winter Road Maintenance 14
BMP 6-8: Stormwater Pollution Prevention Plans (SWPPPs) 15
BMP 6-9: Nitrogen Source Identification Report 15
BMP 6-10: Stormwater BMP Retrofit Evaluation/Inventory 15

ATTACHMENTS 16

Attachment A: City Parks Map

Attachment B: City Spill Response SOP

Attachment C: Street Sweeping Route Map

Attachment D: City Catch Basin Cleaning SOPs and Inspection Log
Attachment E: Stormwater BMP Inspection SOP's and Forms

Attachment F: Salt Reduction Plan

INTRODUCTION

The City of Portsmouth has developed this Operations and Maintenance (O&M) Plan to describe specific procedures and best practices that are used to perform Good Housekeeping and Pollution Prevention measures at its facilities and for its stormwater drainage infrastructure consistent with the requirements of Part 2.3.7.1 of the 2017 New Hampshire Municipal Separate Storm Sewer System (MS4) Permit (herein referred to as the 2017 MS4 Permit). The 2017 MS4 Permit requires that the O&M Plan be completed by July 2020 or 2 years from the effective Permit date.

The 2017 MS4 Permit identifies four (4) principal type of permittee-owned facilities or activities that must be addressed in the O&M Plan:

- Buildings and Facilities
- Vehicle/Equipment Storage and Maintenance Facilities
- Parks and Open Spaces
- Stormwater Infrastructure (e.g., catch basins, outfalls and treatment BMPs)

As described in Part 2.3.7.1 of the 2017 MS4 Permit, the overall goal of the O&M Plan is to identify and implement source control and preventative measures to minimize the amount of pollutants being exposed and transported by stormwater runoff into nearby water bodies from the City roadways, material storage/ handling and recreational facilities as well as vehicle maintenance activities, as well as to maintain the functional integrity of the stormwater infrastructure system.

This O&M Plan includes an inventory of City-owned facilities (e.g., buildings, DPW facility, parks and recreational facilities, schools, wastewater treatment facilities, and stormwater infrastructure). It describes specific good housekeeping and pollution prevention procedures and measures used by City personnel in the operations and maintenance activities associated with these facilities.

This O&M Plan is also intended to be a living document that will be periodically updated as procedures and practices are revised and/or as facilities or operations are modified. Although the City has had well-established good housekeeping and pollution prevention measures in place, practices, equipment, tools and technologies are constantly evolving based on new research and information on best practices.

The City has also developed a Stormwater Pollution Prevention Plan (SWPPP) for its DPW facility in 2020 to describe specific good housekeeping and pollution prevention measures for these facilities to minimize the potential for pollutants to be exposed and conveyed by stormwater to receiving waters. The O&M Plan will include an employee training component and a process to review and assess operations and report on progress in each future annual report.

This O&M Plan describes the various Best Management Practices (BMPs) used for the various City facilities and/or maintenance activities listed under Minimum Control

Measure (MCM) 6 Good Housekeeping and Pollution Prevention Measures in Section 2.3.7 of the 2017 MS4 Permit. These BMPs include the following:

BMP 6-1: Parks and Open Spaces

BMP 6-2: Buildings and Facilities

BMP 6-3: Vehicle/Equipment Storage and Maintenance

BMP 6-4: Street and Parking Lot Sweeping

BMP 6-5: Catch Basin Cleaning

BMP 6-6: Stormwater Treatment BMPs Inspection and Maintenance

BMP 6-7: Winter Road Maintenance

BMP 6-8: Stormwater Pollution Prevention Plans (SWPPPs)

BMP 6-9: Future Nitrogen Control Plan

BMP 6-10: Future Stormwater BMP Retrofits for City-owned Property

BMP 6-1: Parks and Open Space

The Parks and Greenery Division (PGD) of the Department of Public Works is responsible for the operations and maintenance activities at twenty-one (21) City's parks, recreational facilities and open space areas (see Map in Attachment A). **Table 6.1** lists the various City parks, recreational ball fields and open space areas. The School Department's Facility Maintenance manages five (5) school-based facilities. Typical O&M activities involve trash collection, litter and other waste control, maintaining sanitary facilities (where applicable) as well as turf maintenance and other vegetation management.

With respect to turf management, both the PGD and the School Dept. have adopted an organic based approach relying mainly on organic-based, fertilizers and pest control products. The PGD relies mostly on a compost "tea" to improve soil nutrient conditions in landscaped areas and turf fields instead of synthetic fertilizers. This compost tea is produced by vegetation waste collected by the DPW and has shown to improve turf vitality and durability on the recreational fields. Turf maintenance and landscaping activities are done by knowledgeable personnel familiar with the use of integrated pest management (IPM) practices. When weed or other pest control measures are needed, particularly on the more heavily used, athletic fields, the School Facilities personnel will use organic based products certified as organic by the Organic Management Research Institute (OMRI) a Canadian-based non-profit organization. Grass clippings are either left in place or composted at the DPW yard waste facility.

Table 6-1 lists the various City parks, recreational ball fields and open space areas. The City DPW also maintains trash containers and sanitary facilities at its recreational parks, which are inspected and emptied at varying frequencies depending on usage and time of year. Also, the City has placed signage and containers in select areas to promote pet waste disposal and discourage waterfowl feeding to limit waterfowl congregation and prevent waterfowl droppings from entering the MS4 storm system.

In addition, the City maintains healthy turf and other vegetation in the City parks and open space areas to minimize soil erosion, especially areas along the City's waterfront.

Table 6-1: Inventory of City Parks, Ball Fields and Open Space Areas

Parks / Ball Fields / Open Space	Managed Turf	Sanitary Services	Dog Waste Station
Maple Haven Park	No	No	No
Pannaway Park	No	No	No
Portsmouth Plains Field	No	Restrooms[1]	No
Portsmouth Plains Playground	Yes	Restrooms[1]	No
Lafayette Playground	No	Seasonal Port-a-Let	No
Clough Field	No	Seasonal Port-a-Let	No
Langdon Park	No	No	No
Leary Field / Central Little League	Yes	Yes	No
Alumni Field	Yes	Yes	No
South Mill Pond Playground	No	Seasonal Port-a-Let	No
South Street Playground	No	No	No
Peirce Island Playground	No	Seasonal Port-a-Let	No
Haven Park	No	No	No
Aldrich Park	No	No	No
Daniel Street Pocket Park	No	No	No
Rock Street Playground	No	No	No
Goodwin Park	No	No	No
Cater Park	No	No	No
Pine Street Playground	No	No	No
Hislop Field	Yes	Restrooms	No
Atlantic Heights Playground	No	Restrooms[1]	No
Bug Rock Park	No	No	No
Hanscom Park	No	No	No
Prescott Park	Yes	Seasonal Port-a-Let	No
Four Tree Island Park	No	Seasonal Port-a-Let	No
Pease Ball Field	Yes	Seasonal Port-a-Let	No
Route 33 Dog Park	No	No	Yes
South Mill Pond Dog Park	N/A	Seasonal Port-a-Let	Yes

1 Restrooms are only open during games or events.

Turf Management and Landscaping

As discussed above, the City uses organic based fertilizers and pest control products turf maintenance on City recreational ball fields, parks and open space areas. In addition, the City uses the following best practices to maintain healthy turf areas:

- Mower blades are routinely sharpened to reduce plant damage:
- Grass heights are generally maintained at 3" or more to reduce plant stress;
- Grass clippings are either left in place or disposed of at City yard waste compost area.
- Residual clippings on mowers (reels and decks) and tractors are removed on grassy areas or disposed of as leaf litter material.

- Equipment cleaning/washing is done in a manner where residual material (i.e. clippings) is contained and disposed of properly and not left on paved areas to drain away into storm drains
- In select areas, appropriate barriers/fencing is used around maintained turf areas to protect against vehicle traffic and damage due to compaction and tire wear.
- Where appropriate, the City utilizes non-chemical best practices to promote healthy turf such as aeration, dethatching and reseeding or topdressing with soil amendments;
- Establish reduced or/no-mow areas in lesser-used spaces where appropriate to reduce maintenance needs.

Nitrogen Impairment Requirements

The City has adopted practices that are consistent with the requirements of Part 1 of Appendix H of the MS4 Permit which include the following protocols with respect to fertilizer use and managing grass clippings:

1. The City's uses organic fertilizers and compost tea represent slow release forms of nitrogen fertilizers on City and School maintained property.
2. Grass clippings are mostly left in place for nutrient recycling or, if collected, and disposed of at the DPW yard waste compost facility.

Trash Container Management

The City provides trash containers in select park areas, which are emptied approximately three times a week during the non-winter months and less frequently during winter months. Dog walking is allowed in certain areas and the City has placed signage in these areas to encourage proper disposal of pet wastes. Trash disposal containers are managed by the City's Buildings and Grounds Department. The following preventative and good housekeeping measures are used in managing trash receptacles and disposal.

Best Practices for Trash/Recyclables in City Parks and other Open Spaces

- Lids on dumpsters and containers are generally closed except when adding or removing material.
- Dumpsters are generally located on paved surfaces as far away from catch basins as possible and utilize available berms or curbs area to limit run-on and run-off.
- Waste receptacles are outfitted with tight-fitting lids or covers.
- Wherever possible, waste receptacles are placed in areas protected from wind to minimize trash from being blown out of the container.
- Prior to transporting waste material, containers are checked for leaks and covers are secured to prevent leakage and fugitive debris during transport.
- Clean and sweep up around outdoor waste containers regularly.
- Waste or recycling receptables are emptied frequently enough to prevent containers from being overfilled.
- Trash or recycling containers are not rinsed or washed outdoors.
- Waste storage facilities in commercial and construction work zones are periodically inspected to check for leaks and spills.

Pet Waste

The City has established pet waste disposal stations in several park locations that are popular locations for dog walking (see Attachment A for a map of dog walking areas). **Table 2** presents an inventory of pet waste disposal stations and dog waste sign locations.

Table 2: Inventory of Pet Waste Stations

Location	# Bag Stations	Bag Dispenser	# Trash Cans	# Dog Waste Signs	Notes
South Mill Pond Along Shore	0	No	2	0	
South Mill Pond Dog Park	1	No	4	4	Small dog park-uses mailbox. Trash cans are outside the fence.
Haven Park	0	No	1	0	
Goodwin Park	2	Yes	2	1	
Langdon Park	0	No	0	6	
Ward Park	0	No	1	1	
Islington Trails	1	Yes	1	2	Trash cans near the trail entrance at park and ride
Islington Area	1	Yes	1	3	

Waterfowl Congregation

In areas where waterfowl congregate due to open water or vegetated feeding areas or as result of resident feeding in City parks, the City will continue to discourage waterfowl or seagull feeding using the following measures:

- Place signage in key areas to prohibit feeding of ducks, geese and other waterfowl
- Using predator decoys (owls, eagles, coyotes)
- Plant shrubs or establish tall grass using no mow zones along water shorelines to discourage geese from moving from the water body to mowed feeding areas.
- Intermittent noise makers or strobe lights

Erosion and Poorly Vegetated Areas

The City will use the following erosion control procedures to minimize the discharge of eroded sediment into water bodies.

- Damaged or poorly vegetated areas are repaired as soon as possible to minimize erosion.
- Streambank or shoreline areas within recreational areas are periodically inspected to identify areas of erosion or poor vegetation,
- In select areas, appropriate barriers/fencing will be used to avoid vehicle traffic and damage due to compaction and tire abrasion.

BMP 6-2: Building and Facilities

Consistent with Section 2.3.7.1(b) of the MS4 Permit, the following provides an inventory of City-owned buildings and facilities that may use, store and/or dispose of petroleum products or other chemicals be evaluated to determine that practices are in place to minimize exposure of these products/chemicals to stormwater. Buildings and facilities include town offices, fire and police stations, schools, library, municipal pools and parking garages. **Table 6.3** provides a listing of City Buildings and Facilities, an inventory of materials at school facilities is still being developed by the City.

Table 6.3: City Owned Building and Facility Inventory

Facility Name	Outdoor Fuel or Chemical Storage	Vehicle Maint. / Washing	Outdoor Bulk Materials	Managed Turf / Dogs Stations
City Hall	N/A	N/A	N/A	N/A
Police Department	N/A	N/A	N/A	N/A
Fire Station 1	N/A	Wash Bay in Garage	N/A	N/A
Fire Station 2	N/A	Wash Bay in Garage	N/A	N/A
Public Works Facility	Brine, Fuel (UST)	Wash Bay in Garage	Salt Shed	N/A
Transfer Station	Used Oil	N/A	Yard Waste	N/A
Library	N/A	N/A	N/A	N/A
Old Library	N/A	N/A	N/A	N/A
South Meeting House	N/A	N/A	N/A	N/A
High/Hanover Parking Facility	Diesel, Road Salt	N/A	N/A	N/A
Foundry Place Garage	N/A	N/A	N/A	N/A
Cemeteries	N/A	N/A	N/A	N/A
School Facilities				
Portsmouth High School	Outdoor Storage Cabinet[1]	N/A	N/A	Athletic Fields
Portsmouth Middle School	none	N/A	N/A	Limited
Little Harbor School	none	N/A	N/A	Mowing
New Franklin School	none	N/A	N/A	Mowing
Dondero School	none	N/A	N/A	Mowing
Recreational Facilities				
Greenleaf Recreation Center	N/A	N/A	N/A	N/A
Spinnaker Point Recreation Center	N/A	N/A	N/A	N/A
Indoor Swimming Pool at HS	N/A	N/A	N/A	N/A
Peirce Island Outdoor Pool	Chlorine (55 Gal Drums, Acid[2]	N/A	As Listed	N/A

Notes: [1]Used motor oil is stored in 55-gal drums inside enclosed drum cabinet located just outside auto shop. [2]Chemicals stored inside a secured enclosure within fenced in areas.

Best Practices and Standard Operating Procedures

Trash and Waste Management (See Best Practices under Parks and Open Spaces)

Turf Management (see Best Practices listed under Parks and Open Space)

Chemical and other Material Storage

The following represents best practices and preventative measures used for chemical and other material storage in City buildings and facilities.

- Hazardous materials and chemicals are stored indoors in designated, labeled containers in secure areas with secondary containment.
- Containers are labeled to indicate contents along with its hazard rating symbol according to hazardous material regulations.
- Chemical and petroleum storage areas are routinely inspected to detect possible leaks or spills.
- In the event of spill or leak, liquids are contained and absorbed using absorbent materials and dry materials area cleaned up using dry cleanup methods.
  The City has developed Spill Response and Control Standard Operating Procedures (SOPs) for spill control containment and disposal methods (See Attachment B).

BMP 6-3: Vehicles and Equipment Storage and Maintenance

Vehicles Fueling Areas

The City has a vehicle fueling station at the DPW Facility. This fueling station has spill response kits to contain and respond to an inadvertent spill and prevent the discharge of petroleum-based products to surface waters. This facility has a Spill Prevention Control and Countermeasure (SPCC) Plan that outlines spill response and good housekeeping/ pollution prevention measures at the fueling station.

Best Practices / Preventative Measures

Vehicle Storage / Maintenance

- Vehicles are primarily stored indoors, and vehicle maintenance activities are done indoors within the DPW Facility
- Vehicles and equipment are routinely inspected for leaks and repaired as necessary.
- If a leak is discovered, fluids are contained using drip pans and spill response kits appropriately,
- Vehicle fluids generated from vehicle maintenance are disposed of using a licensed waste hauler.
- The auto repair shop inside the high school also conducts vehicle maintenance and stores any petroleum and other materials in appropriate secure containers.

Vehicle Fueling

- Fuel storage tanks and vehicle fueling areas are inspected at a minimum on a monthly basis
- Spill response kits are maintained in the vehicle refueling area and storage areas.
- The City has developed Spill Response Standard Operating Procedures (see Attachment B).

Vehicle Washing

- Washing of DPW vehicles is typically done indoors in the Wash Bay that is connected to an oil/water separator and then the sanitary sewer system
- Police vehicles are either washed at commercial facilities or at the DPW facility which has floor drains that are connected to municipal sewer.
- The Fire Department either washes its vehicles indoors that also has floor drains connected to the sanitary sewer or occasionally washes vehicles outdoors.

Stormwater Infrastructure Operations and Maintenance

BMP 6-4: Street/Parking Lot Sweeping

The City DPW has instituted a rigorous Street Sweeping Program and sweeps approximately 790 roadway lane miles including parking lot areas as part of its annual Sweeping Program. As described further below, the City has twenty (20) different sweeping routes targeting roadways with curbing and/or catch basins and City-owned parking lots that are generally swept at least twice per year from April to October.

General Permit Requirements

Section 2.3.7.1.d.iii of the MS4 Permit requires all City owned roads and parking lots with curbs and/or catch basins be ***swept at least once per year*** in early spring following winter deicing applications.

The Permit also requires tracking and annual reporting of which streets are swept and the amount of sediment material recovered.

Nitrogen Impairment-Appendix H Requirements

For areas that drain to water bodies that are considered nutrient impaired, either nitrogen or phosphorus impaired, Part 1 of Appendix H of the MS4 Permit requires City streets and parking lots **to be swept *at least twice per year***.

Reporting Requirements:

The number of miles swept, and the volume or mass of material removed shall be reported in each annual report.

Current Sweeping Practices

The City has twenty (20) different sweeping routes that are swept at least twice consistent with the added MS4 Permit requirements and most streets are swept as much as four times per year from April to the end of October. Downtown area streets are swept weekly by the downtown parking division that has its own sweeper (See Sweeping Route Map in Attachment C). Roadways and parking lots that are closest to and/or drain directly to tidal waters are considered the highest priority. Completion of sweeping routes and volume of material recovered is recorded daily using a Sweeping Log.

During FY2019, approximately 790 roadway miles were swept and 320 tons of street sweeping material was collected and disposed of. The City also utilizes a sidewalk sweeper to help reduce debris entering the stormwater system. Table 6.4-2 provides an annual summary of the City street sweeping activity. The City will continue to record the number of miles cleaned and the volume or mass of material removed and will be reported in future Annual Reports.

Table 6.4-2 Fiscal Year Summary of Sweeping Activity

Fiscal Year	*# of Miles Swept*	*Material Recovered (tons)*
FY2019	790	320
FY2020	790	201
FY2021	790	150
FY2022	790	258
FY2023	790	160
FY2024	790	550

Sweeping Material Storage /Disposal

Sediment and debris recovered during street sweeping is stored in a designated, open stockpile located behind the DPW facility. This area is contained by jersey barriers and does not drain directly to a storm water drainage system or adjacent water body.

Responsible Department/Parties:

Utilities Maintenance Supervisor/ Downtown Parking Division

BMP 6-5: Catch Basin Cleaning

The City maintains an intensive catch basin cleaning for approximately 2,700 storm drain catch basins located in the MS4 area. Approximately 50% of the City's catch basins are inspected and cleaned each year.

General Permit Requirement

The MS4 permit requires the following conditions to be met:

- Establish a cleaning schedule with goal that ensures that catch basins are cleaned frequently enough that no catch basin will be more than 50% full at any time.
- Keep of a log of catch basins cleaned and ensure proper storage of catch basin cleanings and street sweepings prior to disposal or reuse such that they do not discharge to receiving waters. The Permit also requires that

Develop a prioritization schedule to prioritize areas that may have higher sediment loads due to construction activities, steep terrain or erosion issues or higher nutrient loads due to fertilizer usage, agricultural practices and/or improper pet waste disposal.

Reporting Requirements

For each Annual Report, the City will report on the following items:

- The number of catch basins that were cleaned and inspected,
- The total mass of material removed from all catch basins, and
- Whether any changes are planned to catch basin cleaning schedule to help ensure no sump is more than 50% full at any given time.

The Permit also requires the City to document in the SWMP and in the first Annual Report its plan for optimizing catch basin cleaning, inspection plans, or its schedule for gathering information to develop the optimization plan.

The City's Catch Basin Cleaning Practices

The City has established Standard Operating Procedures (SOPs) for catch basin cleaning (see Attachment D). Catch basins are currently prioritized based on past observations of the storm drain system and receiving water bodies. The City has given higher priority for catch basin cleaning in areas that drain to North Mill Pond Hodgson Brook and Sagamore Creek.

City personnel conduct catch basin cleaning for one of three (3) reasons, Emergency, Routine Maintenance, and new Construction. The following procedures are used for catch basin cleaning:

- Each catch basin is inspected for structural damage, noxious materials, sewage, or heavy flow. If any of these conditions are present, the inspectors are to contact the Utilities Management Supervisor for further instructions.
- Prior to cleaning, the initial depth to sediment from top of the grate frame is recorded (see Diagram in City SOP's in Attachment D.).
- Cleaning is done using vacuum equipment while limiting the use of excessive wash-down waters to remove debris. Cleaning generally begins at the upstream end and works downstream of a closed drainage system.
- Following sediment removal, the depth to the catch basin bottom is measured and reported on the catch basin cleaning/inspection log.
- All personnel engaged in catch basin cleanings should be familiar with the City's SOPs related to confined space entry procedures.

Table 6.5-1 provides a summary of the annual catch basin cleaning activity and material removed by fiscal year. The City has approximately 2,560 catch basins in the MS4 Area. In FY2019, approximately 1,010 catch basins were inspected and cleaned with a total of 322 tons of sediment removed as documented using the City's mobile data collection system.

Table 6.5-1 Catch Basin Activity and Material Recovered by Fiscal Year

Fiscal Year	# of CB's Inspected/ Cleaned	Material Recovered (tons)
FY2019	1,010	322
FY2020	1,278/1,100	149
FY2021	550/440	115
FY2022	400/170	80
FY2023	400/164	107
FY2024	700/307	60

Catch Basin Grit Storage

Material recovered from catch basin cleaning activity is stored in an enclosed, designated catch basin drying area contained by concrete barriers located behind the DPW facility. This area is currently being moved to another location within the DPW facility that will allow for more infiltration of stormwater during the dewatering process.

Responsible Department/Parties:

Utilities Maintenance Supervisor

BMP 6-6: Stormwater Treatment BMP Inspection and Maintenance

Inspection and Maintenance Procedures

The City has several different types of stormwater BMPs to treat stormwater runoff from roadways and/or parking lots that require varying types and levels of inspection and maintenance activities that are to be done on a routine basis. Standard Operating Procedures (SOPs) have been developed to guide stormwater BMP inspections. The inspection frequency and maintenance procedures differ mostly between underground vault type BMPs and above-ground, vegetated treatment BMPs as described further below.

UNDERGROUND TREATMENT BMPS

Table 6.6-1 provides a listing of the underground stormwater BMPs maintained by the City DPW. Inspection and maintenance details for underground vault type BMPs are described in the South Mill Pond Stormwater Treatment BMP Operations and Maintenance Manual. Inspectors will document observations using the City's Stormwater BMP inspection log (see Attachment E).

Table 6.6-1: Summary of City Maintained Stormwater BMPs

BMP Type	BMP ID #	Location	Frequency
Vortechnics 2436CIP	10311	*Lincoln Avenue Area*	Sediment (grit) chamber is inspected quarterly Cleaning of system will occur on an as needed basis according to inspections
Downstream Defender	25194	Memorial Bridge	Systems are inspected quarterly to evaluate sediment and floatable accumulation
	6145	Bartlett Street	
	12814	Rogers Street	

** The City will include information on other installed BMPs as it becomes available.

Inspectors will inspect and note the following information:

1. Depth of sediment, trash accumulation or other debris,
2. Any unusual staining, discoloration, foams, oil sheens, noxious odors or any other indicator of potential stormwater contamination.
3. Any structural damage or blockages or flow.

Trapped oils and grease, other observed floatable materials within the BMP should be removed using appropriate vacuum truck prior to removing any accumulated sediment.

Vegetated Stormwater Treatment BMPs

Vegetated treatment BMPs generally require less frequent inspections and maintenance since any prevailing issues are much more visible and these BMPs are generally sized to handle larger water quality volumes or flow rates compared to underground vault and swirl type BMPs. These BMPs are also not designed to trap and retain petroleum products or other floatables. Semi-annual and/or annual inspections are generally considered appropriate for these types of BMPs.

The City maintains various vegetated stormwater treatment BMPs including tree well filters, rain gardens, biofiltration areas, extended detention basins and gravel wetlands. Table 6.6-2 describes basic inspection and maintenance requirements for vegetated BMPs.

Table 6.6-2 Inspection and Maintenance Activities for Vegetated BMPs

BMP Type	Activity	Time of Year	Frequency
Detention Basins	Inspect and repair eroded soil or other damaged areas caused by channelized flow	Spring	Annually
	Seed/mulch areas with poor vegetation cover (<75% cover) - Replace dead herbaceous plantings	Spring	Annually
	Remove excessive sediment and/or trash accumulation	Spring	Annually
	Inspect and remove invasive species by hand if present	Spring	Annually
	Ensure outlet is free-flowing and no channel scour downstream	Spring	Annually
Tree Box Filters, Rain Gardens, Filter Media BMPS	Inspect and remove trash and other organic debris	Spring and fall	Bi-annually
	Inspect for prolonged periods of ponded water following storm events – ensure outlet media/outflow is free-flowing	Spring and fall	Bi-annually
	Inspect BMP outlet and repair any channel scour damage	Spring and fall	Bi-annually

Other Stormwater Treatment BMPs

Infiltration /Filtration Devices

In addition to the items listed above, the following are conditions /maintenance items are specific to infiltration/ filtration devices and should be part of the annual inspection process and corrected, if necessary, for these types of BMPs.

1. Inspect infiltration and filtration BMPs annually during or immediately following storm events to assess whether standing water is present for prolonged periods of up to 48 to 72 hours after a storm event: prolonged standing water usually indicates clogged filter media and/or poor infiltration conditions
2. If prolonged periods of standing water are observed, corrective actions will be required to restore the intended treatment efficiency.
3. Winter Conditions – no snow storage or sand applications should be allowed directly upstream or on top of infiltration/filtration devices

Permeable Pavement / Concrete

In addition to the items listed above, the following inspection and maintenance activities should be performed for permeable pavement or concrete surfaces:

1. Inspect surfaces biannually for excess sediment, leaf litter or debris that may affect infiltration. Vacuum or use leaf-blower to remove excess debris
2. Inspect surfaces during or immediately following storm events to assess whether stormwater pools on surface for more than 30 minutes;
3. Vacuum at least once per year with high-efficiency, regenerative air vacuum truck;

BMP 6-7: Winter Road Maintenance

The City DPW maintains approximately 200 miles of roadway in accordance with its own Snow and Ice Removal Plan. The City also maintains several municipal parking lots and sidewalks in critical areas and seeks to provide practical safe access to homes, businesses and municipal facilities during winter storms. poses. Road salt applications may be supplemented with liquid calcium chloride during cold temperatures below 20ºF.

There are five streams within the City limits that are listed as chloride impaired according to the 2024 303(d) list. Most of these streams, except for Sagamore Creek, originate in areas adjacent to the Pease International Tradeport and flow through major roadway corridors associated with multi-lane roadways maintained by the NHDOT including Routes I-95 and NH Route 16 (Spaulding Turnpike) before flowing through the main portions of the City.

The City utilizes the following basic practices to optimize its snow and ice control operations and minimize its deicing chemical usage:

- Plowing snow is considered the first line of defense for clearing roads
- School bus routes and the downtown area are generally given highest priority.
- Applying road salt to roads is done only when necessary and under appropriate temperature conditions.
- Road salt is generally applied along the roadway centerline to allow vehicle traffic, and the crown slope mixes the salt with snow to create a brine mix.
- DPW spreader trucks are calibrated each year prior to each winter season to make sure that application settings are putting out the targeted amount.
- DPW uses various weather forecast information to help in the decision-making process in determining when plowing and/or deicer applications may be necessary.
- Several DPW employees are familiar with the Green SnowPro® Certification training program and will look to train employees in the future as funding allows
- Sand is only applied in select areas and only during unusual cold temperatures to assist with traction.
- Road salt and sand mixed with salt are stored under cover or enclosed buildings.

In Permit Year 3, the City developed a more detailed Salt Reduction Plan to describe various current and future best practices to increase its effectiveness and efficiency of road salt use including the increased use of liquid deicers. The Salt Reduction Plan is included in this O&M Plan as Attachment F.

BMP 6-8: Stormwater Pollution Prevention Plans (SWPPPs)

Description: Consistent with Section 2.3.7.2 of the 2017 MS4 Permit, the City plans to develop a Stormwater Pollution Prevention Plan (SWPPP) for its DPW maintenance facility associated storage areas and its Pierce Island Wastewater Facility, which are the only facilities within the MS4 that have outside storage of materials that may potentially be exposed to stormwater. The SWPPP shall include a map of the facility and a description of the activities that occur at the facility. The map shall show the location of the stormwater outfalls, receiving waters, and any structural controls. Identify all activities that occur at the facility and the potential pollutants associated with each activity including the location of any floor drains.

Due to the Covid-19 virus outbreak, completion of the SWPPP has been postponed Year 3 given the disruption to operations and limitations placed on conducting facility inspections. The SWPPPs are anticipated to be completed by the end of July 1, 2021. The SWPPP will include instructions for conducting employee training and routine facility inspections and associated documentation forms.

BMP 6-9: Nitrogen Source Identification Report

Description: Given the nitrogen water quality impairment associated with the coastal waters, the City will need to develop a Nitrogen Source Identification Report within 4 years of the effective permit date (July 2022) consistent with Part I of Appendix H requirements. The Report will need to be submitted to EPA as part of the year 4 Annual Report. The report will include the following elements:

1. Calculation of total MS4 area draining to the impaired water quality segments or their tributaries, using updated mapping and catchment delineations produced pursuant to Part 2.3.4.6,
2. All screening and monitoring results pursuant to Part 2.3.4.7.d., targeting the receiving water segment(s)
3. Impervious area and DCIA for the target catchment
4. Identification, delineation and prioritization of potential catchments with high nitrogen loading
5. Identification of potential retrofit opportunities or opportunities for the installation of structural BMPs during redevelopment.

BMP 6-10: Stormwater BMP Retrofit Evaluation/Inventory

Description: Per Appendix H requirements for the nitrogen impairments, the City will evaluate and develop an inventory of municipal property that may represent feasible locations for stormwater BMP retrofits to treat existing paved areas and reduced existing pollutant loads. The inventory and feasibility assessment will be incorporated into the Nitrogen Source Identification Report with updates on planned implementation included in the 5th year Annual Report.

ATTACHMENTS

Attachment A: City Parks Map
Attachment B: City Spill Response SOP
Attachment C: Street Sweeping Route Map
Attachment D: City Catch Basin Cleaning SOPs and Inspection Log
Attachment E: Stormwater BMP Inspection SOP's and Forms
Attachment F: Salt Reduction Plan

ATTACHMENT A:

City Parks Map

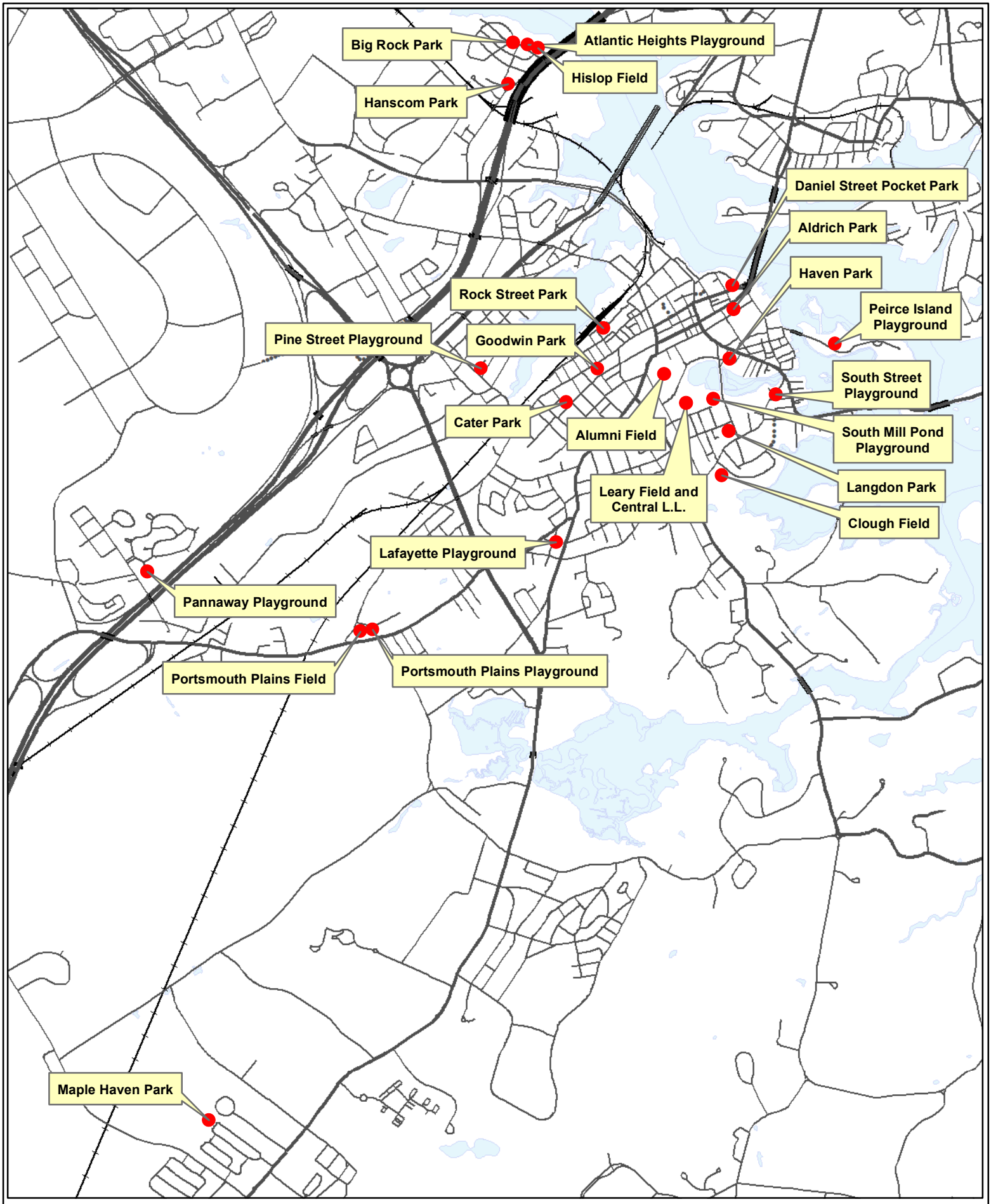

Parks and Playgrounds
Portsmouth, New Hampshire
cityofportsmouth.com/public-works/grounds/parks

0 0.5 1 Mile
0 0.5 1 Kilometer
N

Map prepared by Portsmouth Department of Public Works, 20 August 2019

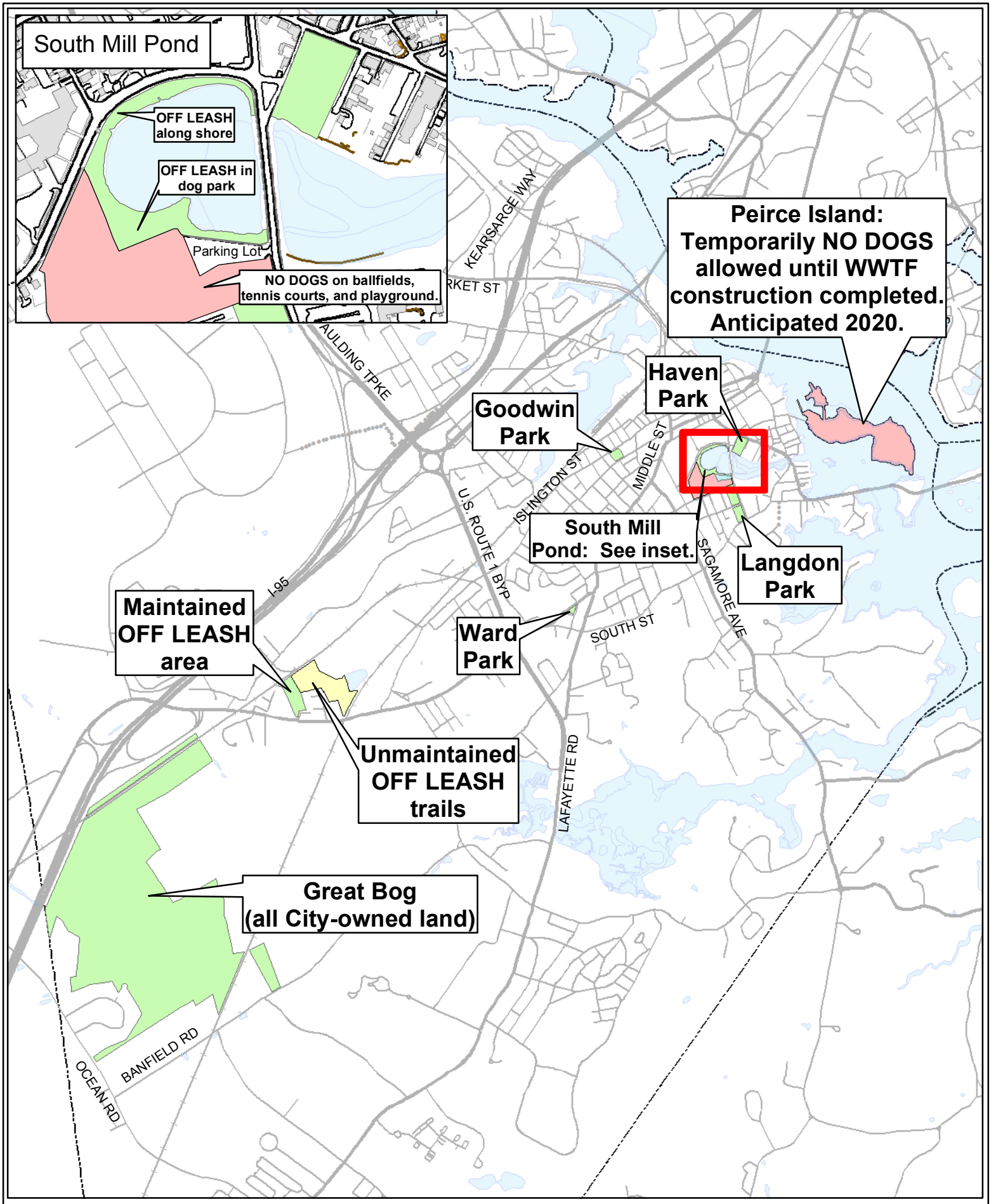

Off-Leash Areas
Portsmouth, New Hampshire

Map prepared by Portsmouth Department of Public Works, 14 November 2016

Dogs must be under voice control and observation.

0 0.5 1 Miles

0 0.5 1 Kilometers

N

:

ATTACHMENT B:

City Spill Response SOP

HAZARDOUS SPILL REPORTING AND CONTAINMENT PROCEEDURE

There are four basic steps to take for hazardous spills. They are: communicate the hazard, control the spill, contain the hazard and clean up the spill and any damage. Obviously, the size and location of the spill will dictate the appropriate level of response. Each situation is different, however, following these guidelines will help to ensure that you, the public and our environment are safe.

1) **Communicate the Hazard:** Call a supervisor immediately. It needs to be determined if the Fire Department needs to be notified. Things to communicate are; is anybody injured, how big is the spill, what material has spilled, the location and is the material still leaking. It is also important to note if the spill is entering a catch basin or other storm structure, or, if any waterbody is involved.
2) **Control the Spill:** If it is safe to do so, shut off or block off the origin of the spill. If someone is with you at the time, these two steps can be done simultaneously. This step may also include blocking or rerouting traffic and pedestrians to prevent injury.
3) **Contain the Hazard:** Assuming it is safe to do so, containing the spill or hazard is next. If your vehicle is equipped with a spill kit or rags that might be useful. If you have shovels dirt from the roadside may be all you need to slow the movement of material down or deflect it away from basins long enough for assistance to arrive with spill containment products.
4) **Clean Up the Spill:** Depending on the severity of the spill and the type of material involved this step may fall on to professional services. If not, it will be decided what the best method to clean the spill will be by a supervisor, the fire officials or a professional services company.

As we said before, every situation is different. These are simply basic guidelines to follow. Alerting a supervisor or the Fire Department and calmly communicating the situation goes a long way towards minimizing the potential damage.

HAZARDOUS SPILL REPORTING AND CONTAINMENT PROCEEDURE

There are four basic steps to take for hazardous spills. They are: communicate the hazard, control the spill, contain the hazard and clean up the spill and any damage. Obviously, the size and location of the spill will dictate the appropriate level of response. Each situation is different, however, following these guidelines will help to ensure that you, the public and our environment are safe.

The Utilities Department has invested in a variety of hazardous spill containment/clean up supplies and dedicated a section of out parts room to keep them in a single location for quick access.

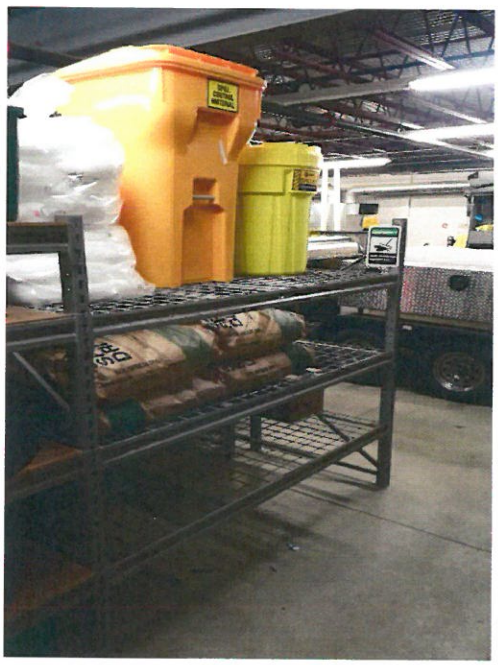

**** still working on this section****

:

ATTACHMENT C:

Street Sweeping Route Map

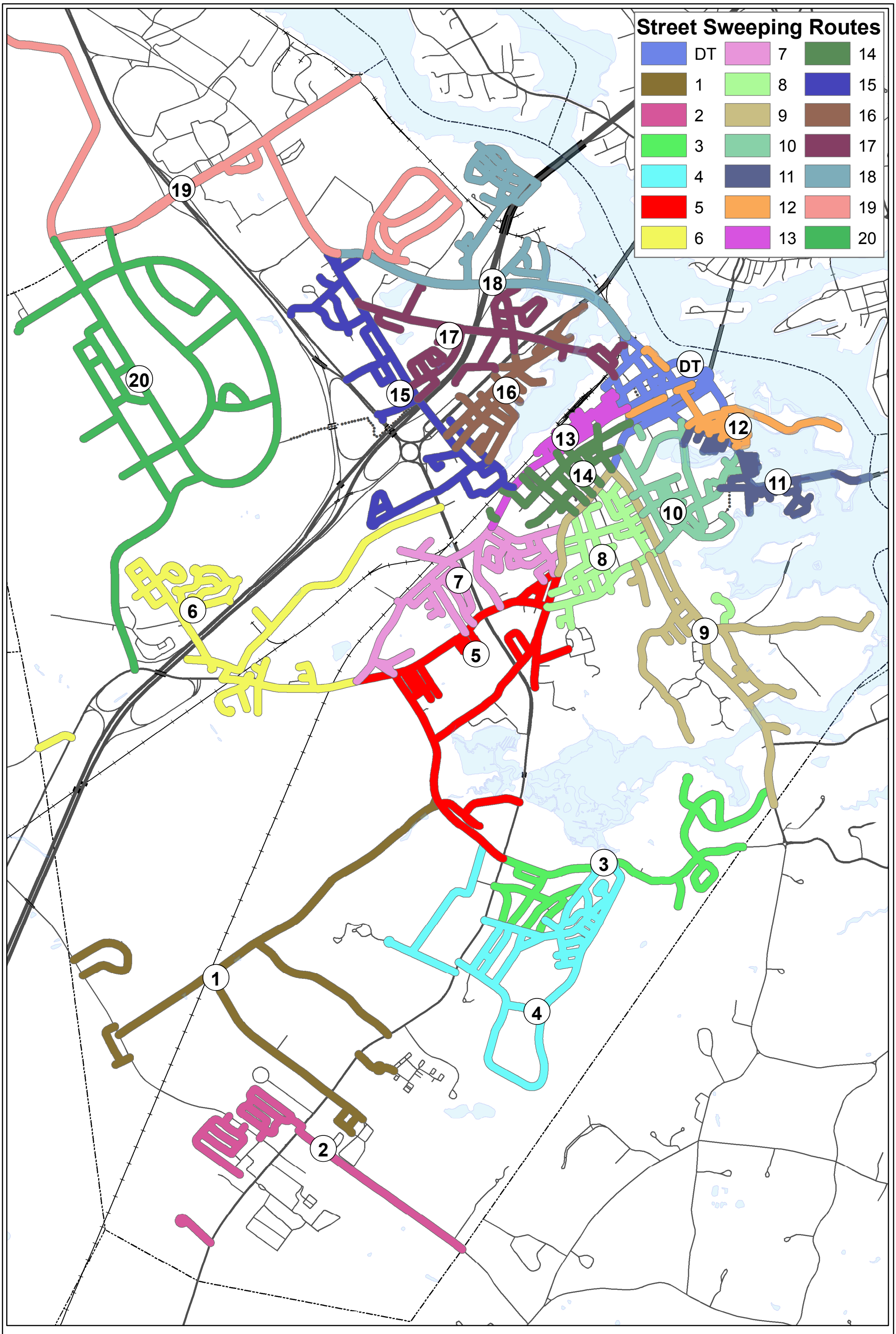

Street Sweeping Routes
Portsmouth, New Hampshire
Map prepared by Portsmouth Department of Public Works, 06 November 2013
Map document: U:\Projects\0420 Street Sweeping\Sweep Routes 11x17.mxd

:

ATTACHMENT D:

Catch Basin Cleaning SOP and Inspection Form

City of Portsmouth

Protocol for Cleaning Storm Drains and Catch Basins

Storm drain and catch basin cleaning are critical components to keeping local waterways clear. Best management practices should be incorporated into standard operating procedures to ensure performance objectives are met and to ensure the safety of the work crew performing the cleaning and the general public.

It is important to know the purpose of the cleaning, which is typically one of the following:

- **Emergency** — The requirement is to remove or relieve a blockage to prevent stormwater overflow, backup, noncompliance and property damage.
- **Routine maintenance** — The requirement is to maintain the hydraulic handling capacity of the storm sewer system, as well as prevent point source pollution from entering a waterway.
- **New construction** — The purpose of cleaning new construction storm drainage systems is to remove any sediment or debris that may have accumulated in a new system during the construction process.

Once crews determine the reason for cleaning, it's important to follow written standard operating procedures (SOPs). A step-by-step procedure should be clear so both supervisors and operations crews can understand and follow it:

1. Operator and/or helper will set up traffic control devices per Manual on Uniform Traffic Control Devices (MUTCD) or local standards.

2. Site safety review with work team and review system mapping when available.

3. Operator will pull up to catch basin or structure and center vacuum hose over opening.

4. Remove cover to catch basin. In many cases covers may be lodged or simply too heavy to lift with standard equipment. These should be reported to the collections system supervisor and an alternative presented.

5. Cleaning will begin according to specification. It is beneficial to vacuum and remove debris without excessive use of wash down water as it will fill the debris storage body faster. However, in many cases, debris must be broken up using a high-pressure wash gun.

Circumstances that may prevent cleaning operations and require special attention include:

- **Basin or structure is damaged, collapsed, or ready to collapse and cleaning may cause additional damage**. Please notify a supervisor and place a warning device, such as a traffic cone, if needed.
- **Oil or other hazardous materials that may be present** (contact collections system supervisor immediately). Determine if the material is or has escaped the basin and entered the system.
- **Sewage or any contaminated materials that may be present** (contact collections system supervisor immediately). As with hazmat materials, it is important to note weather or not the sewage has entered the system or is contained within the structure. Any sewer overflow requires an SSO (Sanitary Sewer Overflow) form to be filled out.
- **Heavy flow due to rainwater runoff.** It is futile to try and clean with heavy flow. If it is not an emergency, please note the amount of flow and move on to the next site.
- **Always keep sewer and drain system loads separate.** Please clean the truck before switching between drain and sewer. Also please dump only in the specified containment areas at **Pease WWTP**.

6. It is recommended to begin at the upstream end of a system to allow for downstream decanting of liquids. In many areas if a system discharges to a waterway decanting back into the system is not allowed, and an area to discharge water should be identified with the collections system supervisor prior to the start of a job.

7. A catch basin inspection form is to be filled out as completely as possible for each catch basin serviced.

8. Replace cover to basin, making sure it fits properly and is in good condition (report any defects immediately to the collection systems supervisor). In many cases the catch basin is marked with a paint mark or hash to indicate it has been cleaned.

City of Portsmouth

Catch Basin Inspection Report

Catch Basin I.D.	_____	Final Discharge from Structure? Yes ☐ No ☐ If Yes, Discharge to Outfall No:_____	
Address			
Basin Material:	Concrete ☐ Corrugated metal ☐ Stone ☐ Brick ☐ Other: _____ ☐	Catch Basin Condition:	Good ☐ Poor ☐ Fair ☐ Crumbling ☐
Pipe Material:	Concrete ☐ HDPE ☐ PVC ☐ Clay Tile ☐ Other:_____	Pipe Measurements:	Inlet Dia. (in): d= ____ Outlet Dia. (in): D= ____

Required Maintenance/ Problems (check all that apply): ☐ Tree Work Required ☐ New Grate is Required ☐ Pipe is Blocked ☐ Frame Maintenance is Required ☐ Remove Accumulated Sediment ☐ Pipe Maintenance is Required ☐ Basin Undermined or Bypassed	☐ Cannot Remove Cover ☐ Ditch Work ☐ Corrosion at Structure ☐ Erosion Around Structure ☐ Remove Trash & Debris ☐ Need Cement Around Grate Other: _____

Sump Depth:	Sediment Buildup Depth : 0-6 (in): ____ 6-12(in): ____ 12-18 (in): ____ 18-24 (in): ____ 24 + (in): ____	Description of Flow: Heavy ☐ Moderate ☐ Slight ☐ Trickling ☐	Basin Diameter:

*If the outlet is submerged check yes and indicate approximate height of water above the outlet invert. h above invert (in):___		Yes ☐	No ☐
☐ Flow ☐ Standing Water (check one or both)	Observations: Color: Odor:	Circle those present:	
Weather Conditions :	Dry > 24 hours ☐	Wet ☐	Foam / Oil Sheen Sanitary Waste / Bacterial Sheen Orange Staining / Floatables Excessive sediment / Pet Waste Other:_____ / Optical Enhancers
Sample of Screenings Collected for Analysis? Yes ☐ No ☐			
Comments:			

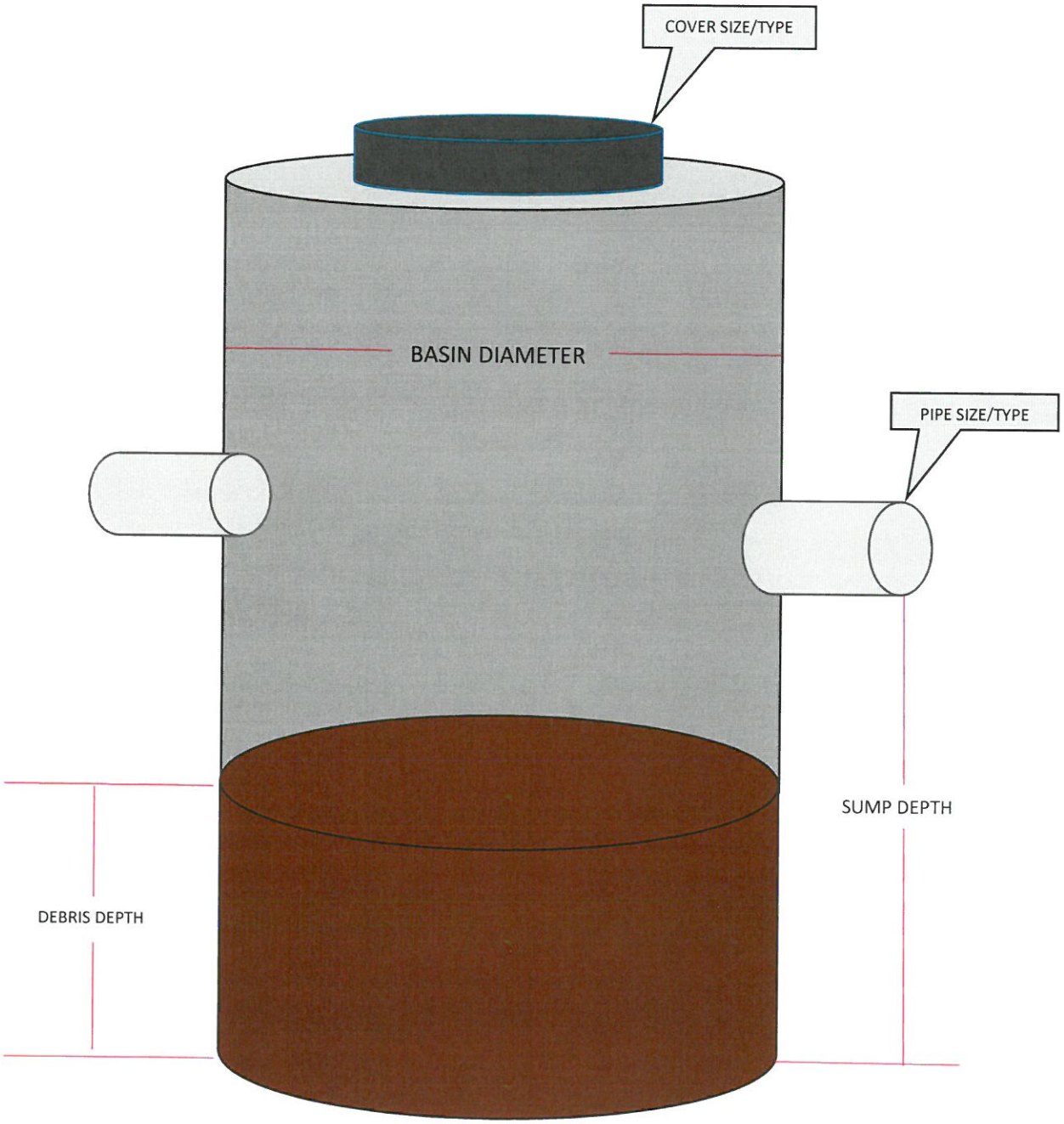
COVER SIZE/TYPE
BASIN DIAMETER
PIPE SIZE/TYPE
SUMP DEPTH
DEBRIS DEPTH

:

ATTACHMENT E:

Stormwater BMP Inspection SOP and Forms

a pipe in the center of the structure and returns into the Flow Diverter where it is discharged to South Mill Pond.

4.2. Routine Inspection and Sampling

4.2.1. Lincoln Avenue Area Stormwater Treatment

The following should be followed when inspecting the Vortechs 2436CIP:

Frequency of Inspections

1) The manufacture's recommends that the sediment (grit) chamber be inspected quarterly (four times a year), even though the frequency of clean outs may differ from year to year.

2) It should be noted that grit removal frequency may be less frequent initially but will increase as additional drain lines and catch basin are cpnnrcted.

Inspection Procedures

1) The O&M Manual provided by Vortechnics (Appendix 9.4.1.) includes a simple ten step method to inspecting the system. Key components involve:

a) Open man hole covers and hatches and inspect each chamber. Since there are no moving mechanical parts, or areas of blockage inside the treatment unit, there is no need to actually get into the structure, keeping inspection easy and safe.

1) During inspection, note large debris that may be blocking the orifice or nay other portion of the unit.

2) To determine the accumulation of sediment, drop a measuring device into the swirling chamber. In measuring this height, one must be used to feeling the lower resistance put out by the finer sediments on the top of the sediment pile. The distance from the hatch rim to the top of the sediment pile should not be any less then 3.7 m (12.14 ft.) (Reference: Appendix 9.3.1 – Vortechnics Operations and Maintenance Manual).

d) It is also recommended to inspect for sediment accumulation outside the grit chamber as well.

e) The thickness of oils and floatable debris should also be noted.

f) Inspection results should be noted on the provided inspection logs (Appendix 9.4.1.)

*The above list is a brief summary. It is recommended that the manufacture's O&M Manual (provided by Vortechnics; Appendix 9.2.1.) be reviewed before inspection procedures begin.

4.2.2. Court Street Area Stormwater Treatment

The Following should be followed when inspecting the Downstream Defender:

Frequency of Inspections

1) The manufacturer recommends that the unit be inspected every 6 months for the first year of operation to be able to determine a rate at which sediment and floatables accumulation

Inspection Procedures

1) The O&M Manual provided by Hydro-International (Appendix 9.4.1.) includes the proper method to inspecting the system. Key components involve:

a) Access to the unit is through the manhole located on top of the structure.

- Since there are no moving mechanical parts, or areas of blockage inside the treatment unit, there is no need to actually get into the structure, keeping inspection easy and safe.

b) To determine the accumulation of sediment, drop a measuring device into the chamber. It is recommended by the manufacturer that the depth of the oils does not exceed 3.0 ft and the depth of the sediment pile does not exceed 4.0 ft. in depth. (Reference: Appendix 9.3.1. – Hydro-International Operations and Maintenance Manual)

c) The thickness of oils and floatable debris should also be noted.

d) Record all inspection results on provided inspection logs provided by the manufacturer. These logs can be found in

the Hydro-International O&M Manual located in Appendix 9.3.1.

*The above list is a brief summary of the inspection procedures for the Downstream Defender. It is recommended that the provided manufacture's O&M Manual (provided by Hydro-International; Appendix 9.3.1.) be reviewed before inspection procedures begin.

4.3. Maintenance Schedule

4.3.1. Lincoln Avenue Area Stormwater Treatment

The following procedure is recommended for a system clean out (see Appendix 9.2.1 for manufactures information on cleaning): An animation of the cleaning procedure is available at www.vortechnics.com.

Cleaning Frequency:

1) Frequency will be field determined based on routine inspections.

When to clean:

1) During dry weather and low flows
2) During Low Tide

Equipment Needed:

Vacuum truck (preferred) or clam shell
-The grit storage volume is 67.0 cy.

Typical Methodology:

1) Remove large debris from the chambers.
2) Remove grit with vacuum truck or clam shell.
3) As the water level drops the floatables will pass back to the swirling chamber and may be removed.

Special Notes:

1) If clean outs are not performed when they are necessary, the areas outside the grit chamber will also have to be vacuumed out due to the accumulation of sediments that will occur in that area.

2) Petroleum spills or other liquid contaminants entering the treatment unit should be cleaned immediately using properly trained staff. The appropriate regulatory agencies should be contacted immediately.

3) If floating hydrocarbon layers are visible, they should be cleaned by using absorbent pads.

4) It is recommended that during the winter months when road sanding occurs, or in areas where machinery is rinsed off regularly, inspections occur more frequently due to the possibility of accelerated sediment accumulations.

5) For a complete detail on maintenance procedure please see the manual in Appendix 9.2.1. provided by Vortechnics.

4.3.2. Court Street Area Stormwater Treatment

The following procedure is for a system clean out of the Downstream Defender.

Cleaning Frequency:

1) Frequency will be field determined based on routine inspections.

When to clean:

1) During dry weather and low flows
2) During Low Tide

Equipment Needed:

1) A vacuum truck is used to clean out the sediment sump.

- The grit storage volume is 8.7 cy.
- The oil storage volume is 1,050 gallons.

Typical Methodology:

1) Entry to the unit is not required, the hose of the truck only need to be dropped down the manhole opening and cleaning can begin.

2) It is recommended that the floatable materials be cleaned before pumping to prevent any floatables from entering the sump area.

Special Notes:

1) The whole vacuuming procedure should not take more than 30 minutes and will remove about 5,546 gallons of water during the cleaning process.

2) It is recommended that during the winter months when road sanding occurs, or in areas where machinery is rinsed off regularly, inspections occur more frequently due to the possibility of accelerated sediment accumulations

3) The maintenance procedure is also included in Appendix 9.3.1.; Hydro-International's O&M Manual for the Downstream Defender.

4.3.3. System Appearance

Both systems should be clear of any large debris in the swirling chambers or near the outlet chamber. In the main chamber of the Vortechnics Unit, the corners should be clear of any debris or floating materials.

4.4. Record Keeping

4.4.1. Lincoln Avenue Area Stormwater Treatment

The cleaning and inspection should be logged in a log form each time an inspection or clean-out occurs. A sample of maintenance logs for this unit has been provided in Appendix 9.2.1.; Maintenance and Clean-out Procedures Manual provided by Vortechnics

4.4.2. Court Street Area Storm Water Treatment

The cleaning and inspection should be logged in a log every time an inspection or clean-out occurs. A sample of a maintenance logs have been provided in Appendix 9.3.1.; Downstream Defender Operation and Maintenance Manual provided by Hydro International.

4.5. Troubleshooting

There are no moving mechanical parts so trouble shooting the systems is limited to inspection of sediment excess, flow back logs and, over time corrosion. The following are possible problems that could occur and solutions on how to take care of the problem.

- **Localized flooding** - In the event of up stream localized flooding, there are two possible solutions:
  1) One reason that localized flooding may occur is due to a storm larger than the treatment and collection system was designed. A larger storm would cause a flow exceeding the maximum design flow for the systems. A storm surge, due to the very low elevation of the systems, could cause the hydraulic grade elevation to rise resulting in a surcharged pipe. This is expected and with time will drain out to normal conditions once the storm is over
  2) The second reason for localized flooding could be due to a blockage in the treatment system or collection system. The following critical areas should be checked for blockage:
     - Excess sediment
     - Weirs
     - Baffles
     - Inlet Opening
     - Outlet Opening
     - Piping

- **Sediment Excess:** If inspections and maintenance are neglected, there is the possibility of sediments and debris discharging. Sediment would also flow and settle into the outlet pipes and could lead to flow restrictions. If this occurs, review the inspection procedures, inspect the system for an excess of floatables or sediments accumulated in the swirling chamber and follow the cleaning procedures. If the problem is still not corrected after maintenance procedures have been followed, contact the manufacturer.
- **Corrosion:** The swirl chamber is composed of aluminum, which is a corrosion resistant material. However, corrosion could still occur when exposed to the salt from the tidal exchange of water. Inspection of the aluminum shall be completed when the system is cleaned

5. STAFFING AND TRAINING

5.1. Operator Certification

Both of the systems are fairly low maintenance and do not require significant training. Staff familiar with operations and maintenance of stormwater systems would be capable of operating the storm water treatment systems. However, both structures are considered confined spaces and procedures governing confined space entry need to be reviewed before any personnel are permitted to enter through manholes or hatches to inspect or maintain chambers below ground surface.

6. EMERGENCY PROCEDURES

6.1. Possible Emergency Conditions

The following are a list of possible emergency conditions that can occur during operation.

- Oil and hazardous material spills: **Contact emergency personnel immediately.** Spills within the drainage basin could enter the upstream drainage system and be conveyed to the treatment units. It is recommended that the drainage and treatment systems be cleaned as soon as possible following oil or hazardous waste spills entering these systems.
  1) **In the event of a hazardous material/waste spill call the following numbers:**

     - NHDES: 8AM - 4PM, Monday – Friday: 271-3899
     - All other times: NH State Police: 1-800-346-4009

     In the event of a petroleum spill call the following numbers

     - NHDES: 8AM – 4PM, Monday – Friday: 271-3644
     - All other times: NH State Police: 1-800-346-4009
  2) It may be possible to use the drainage system and treatment unit to contain spills to assist in clean up procedures.
- Severe Storms and Abnormally High Tides: Refer to Troubleshooting; Section 4.5
- Blocked Drain Line: Refer to Troubleshooting; Section 4.5

7. SAFETY

Standard safety practice procedures and guidelines can be found in **Appendix 9.4**.

A maintenance worker stationed on the surface uses a vacuum hose to evacuate water, sediment, and debris from the system.

Purchasing replacement parts

Since there are no moving parts in the Stormceptor System, broken, damaged, or worn parts are not typically encountered. However, if replacements parts are necessary, they may be obtained by contacting the following supplier of authentic Stormceptor components.

In New Jersey, contact:

Camtek Construction Products Corp.
3481 Treeline Drive
Murrysville, PA 15668
Phone: (724) 327-3400

The benefits of regular inspection and maintenance are many – from ensuring maximum operation efficiency, to keeping maintenance costs low, to the continued protection of natural waterways – and provide the key to Stormceptor's long and effective service life.

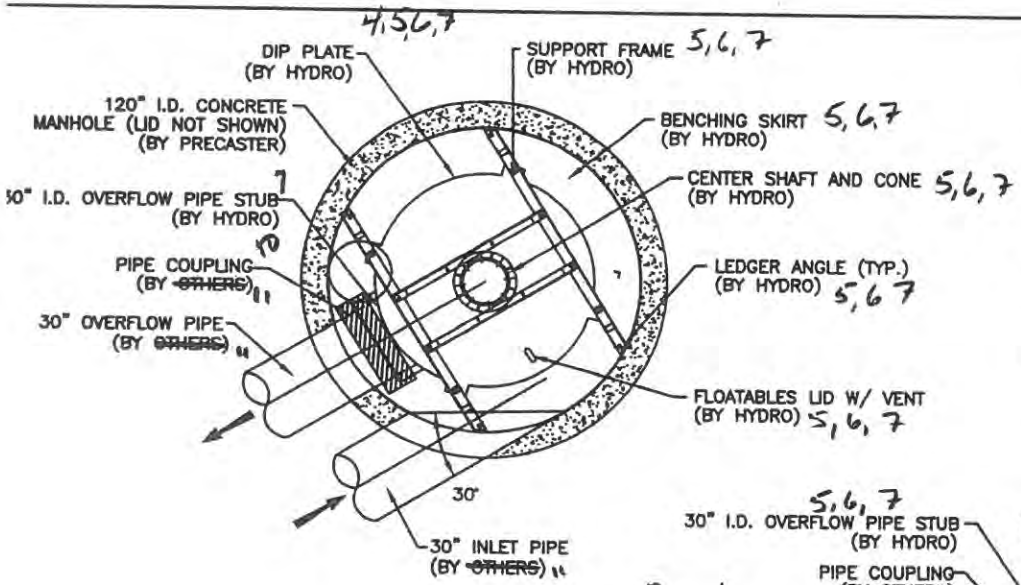

PLAN VIEW

EQUIPMENT PERFORMANCE

The stormwater treatment unit shall adhere to the hydraulic parameters given in the chart below and provide the removal efficiencies and storage capacities as follows:

1. Performance objectives: To remove at least 80% of all particles with specific gravity of 2.65 at the frequent storm flow listed below, based on a particle size gradation similar to typical D.O.T. road sand having greater than 20% of all particles finer than 300 microns. Additionally, the treatment chamber must be capable of removing greater than 50% of all particles in the range of 300–425 microns at the peak treatment flow rate listed below.
2. Frequent storm flow: 13.0 cfs
3. Peak treatment flow: 25.0 cfs
4. Sediment Storage capacity: 8.7 Cu. yd.
5. Oil storage capacity: 1050 Gal.
6. Sediment shall be stored in a zone that is isolated from the main flow path and protected from reintrainment by a benching skirt.

HYDRAULIC PARAMETERS

INLET PIPE SIZE= 30" PVC
OUTLET PIPE SIZE= 30" PVC
MANNINGS COEFFICIENT=.012
TREATMENT FLOW= 15.0 cfs

(9)

DEPTH OF FLOW IN OVERFLOW PIPE AT 15.0 cfs	17.6	INCHES
ESTIMATED HEADLOSS* AT 15.0 cfs	3.0	INCHES

*HEADLOSS IS DEFINED AS THE DIFFERENCE BETWEEN STATIC WATER LEVEL AT THE INLET OF THE DOWNSTREAM DEFENDER TO THE FREE WATER SURFACE IN THE OVERFLOW PIPE, ASSUMING FREE DISCHARGE.

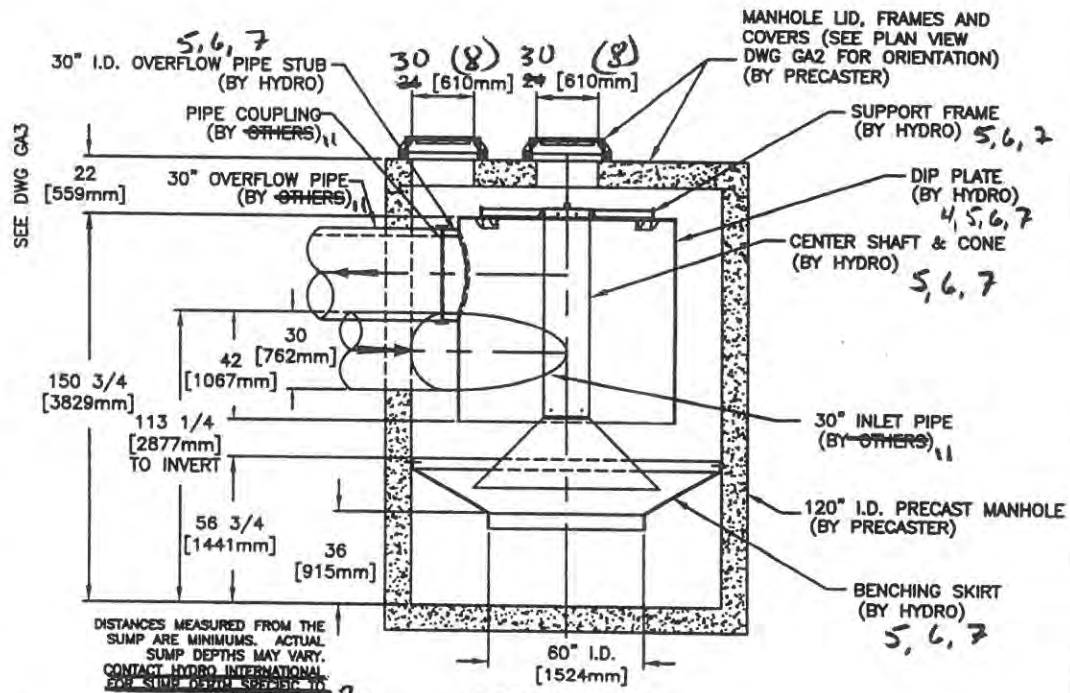

DISTANCES MEASURED FROM THE SUMP ARE MINIMUMS. ACTUAL SUMP DEPTHS MAY VARY. CONTACT HYDRO INTERNATIONAL FOR SUMP DEPTH SPECIFIC TO YOUR INSTALLATION. 2

GENERAL SECTION VIEW

Rev	By	Date	Description
	JDC	12/22/03	SUBMITTAL

Date: 12/22/03
Scale: NTS
Drawn by: JDC
Checked Eng.
Checked Prod.
Approved by: TJB

Title: 10 FT. DIA OFFLINE DOWNSTREAM DEFENDER®

LINCOLN AREA SEWER SEPARATION
PORTSMOUTH, NH

GENERAL ARRANGEMENT

Hydro International

94 Hutchins Drive
Portland, Maine 04102
tel: (207) 756-6200
fax: (207) 756-6212
email: hiltech@hil-tech.com

12

©2003 Hydro International

Any warranty made by Hydro International only applies to those items supplied by it. Hydro International does not accept and expressly disclaims any responsibility or liability for any structure, plant or equipment (or the performance thereof) designed, built, manufactured or supplied by any third-party. Hydro International has a policy of continuous product development and reserves the right to amend the specifications of any of its products or equipment at any time. Hydro International expressly disclaims any liability for the performance of its equipment (or any part thereof) used or made subject to conditions outside of the conditions set forth in Hydro International's design specifications. Hydro International owns the copyright in and to this drawing, which is supplied in confidence, and all intended recipients of the drawing, by their use thereof, agree to hold the drawing in confidence and not to use it for any purpose other than for which it was supplied and not reproduce, in whole or in part, the drawing or any of the equipment or structures depicted therein, without prior written permission of Hydro International.

CAD Ref: 10ga1e
Project No. 2002/454
Drawing No. 10GA1 Rev.

DOWNSTREAM DEFENDER

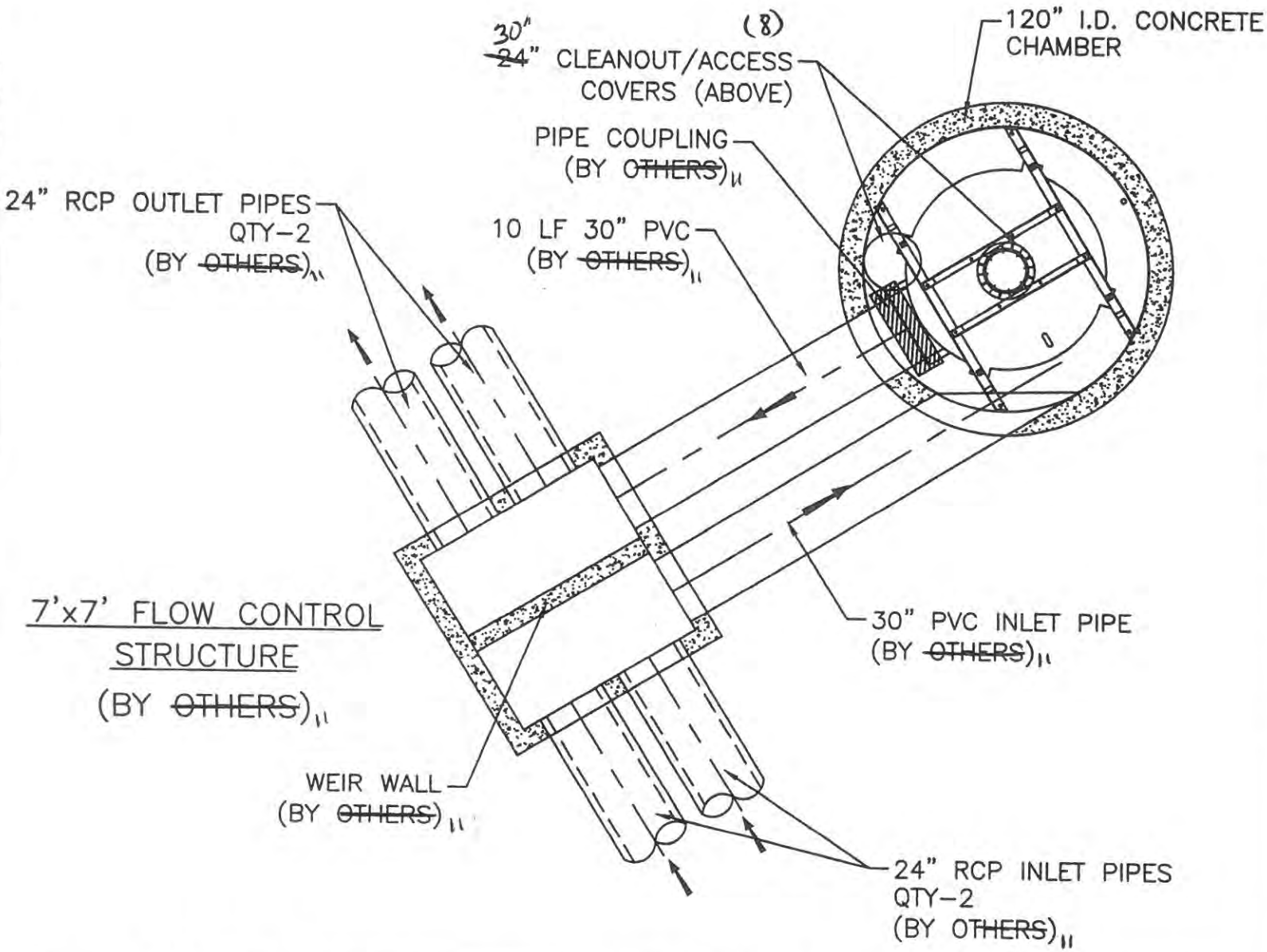

Rev	By	Date	Description
	JDC	12/17/03	SUBMITTAL

Date 12/17/03	Scale 3/16":1'-0"
Drawn by JDC	Checked Eng.
Checked Prod.	Approved by RJS

Title
10-FT DIA. OFFLINE DOWNSTREAM DEFENDER

LINCOLN AREA SEWER SEPARATION
PORTSMOUTH, NH

PLAN VIEW

Hydro International

94 Hutchins Drive
Portland, Maine 04102
tel: (207) 756-6200
fax: (207) 756-6212
email: hiltech@hil-tech.com

©2003 Hydro International

Any warranty made by Hydro International only applies to those items supplied by it. Hydro International does not accept and expressly disclaims any responsibility or liability for any structure, plant or equipment (or the performance thereof) designed, built, manufactured or supplied by any third-party. Hydro International has a policy of continuous product development and reserves the right to amend the specifications of any of its products or equipment at any time. Hydro International expressly disclaims any liability for the performance of its equipment (or any part thereof) used or made subject to conditions outside of the conditions set forth in Hydro International's design specifications. Hydro International owns the copyright in and to this drawing, which is supplied in confidence, and all intended recipients of the drawing, by their use thereof, agree to hold the drawing in confidence and not to use it for any purpose other than for which it was supplied and not reproduce, in whole or in part, the drawing or any of the equipment or structures depicted therein, without prior written permission of Hydro International.

CAD Ref: DDP1
Project No. 2002/454
Drawing No. GA2 Rev.

DEFENDER PIPE CONNECTIONS:

1. RECOMMEND RCP OR PVC OVERFLOW PIPE.
2. LARGE DIAMETER COUPLING REQUIRED TO CONNECT OVERFLOW PIPE TO OVERFLOW PIPE STUB. OVERFLOW PIPE STUB DIMENSIONS: O.D.=36", I.D.=30", STUB LENGTH=6" (10)
3. INLET PIPE ENTERS UNIT TANGENT TO INSIDE OF DEFENDER MANHOLE. CUT PIPE OFF AT 30° ANGLE. (SEE INSTALLATION INSTRUCTIONS.)
4. GROUT INLET AND OVERFLOW PIPES WITH NON-SHRINK GROUT TO ENSURE A WATERTIGHT CONNECTION.

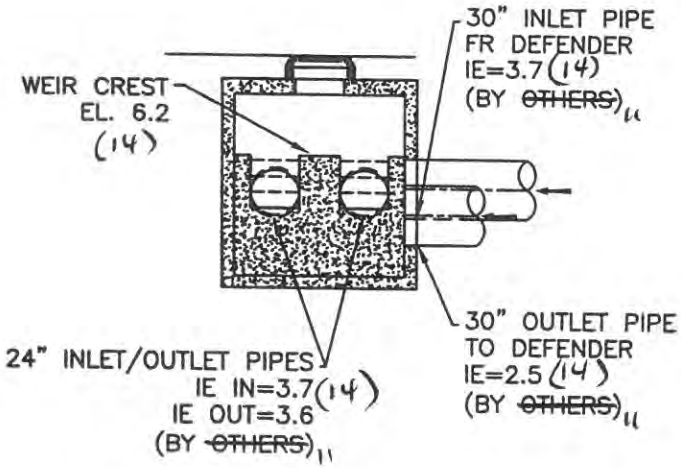

7'x7' FLOW CONTROL STRUCTURE

(BY ~~OTHERS~~)

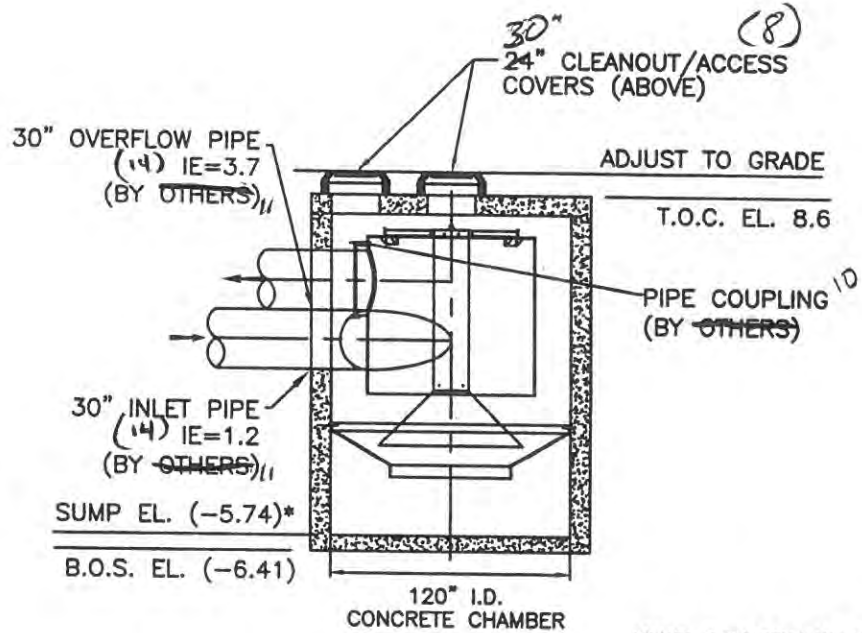

*SUMP ELEVATION MAY VARY SLIGHTLY FROM THE ELEVATION SHOWN BY THIS DRAWING. USE THE INVERT OF THE OVERFLOW PIPE STUB AS A REFERENCE WHEN SETTING THE DEFENDER MANHOLE.

DOWNSTREAM DEFENDER

(BY HYDRO)

Rev	By	Date	Description
	JDC	12/22/03	SUBMITTAL

Date 12/22/03	Scale 1/8":1'-0"
Drawn by JDC	Checked Eng.
Checked Prod.	Approved by

Title
10-FT DIA. OFFLINE DOWNSTREAM DEFENDER

LINCOLN AREA SEWER SEPARATION
PORTSMOUTH, NH

SECTION VIEW

Hydro International

94 Hutchins Drive
Portland, Maine 04102
tel: (207) 756-6200
fax: (207) 756-6212
email: hiltech@hil-tech.com

©2003 Hydro International

Any warranty made by Hydro International only applies to those items supplied by it. Hydro International does not accept and expressly disclaims any responsibility or liability for any structure, plant or equipment (or the performance thereof) designed, built, manufactured or supplied by any third-party. Hydro International has a policy of continuous product development and reserves the right to amend the specifications of any of its products or equipment at any time. Hydro International expressly disclaims any liability for the performance of its equipment (or any part thereof) used or made subject to conditions outside of the conditions set forth in Hydro International's design specifications. Hydro International owns the copyright in and to this drawing, which is supplied in confidence, and all intended recipients of the drawing, by their use thereof, agree to hold the drawing in confidence and not to use it for any purpose other than for which it was supplied and not reproduce, in whole or in part, the drawing or any of the equipment or structures depicted therein, without prior written permission of Hydro International.

CAD Ref: DDP1S
Project No. 2002/454
Drawing No. GA3 Rev.

Hydro International®

Operation and Maintenance Manual

Downstream Defender®

Vortex Separator for Stormwater Treatment

Turning Water Around ...®

Table of Contents

3 **Downstream Defender® by Hydro International**
- Benefits of the Downstream Defender®
- Applications
- Downstream Defender® Components

4 **Operation**
- Introduction
- Pollutant Capture and Retention
- Wet Sump
- Blockage Protection

4 **Maintenance**
- Overview
- Determining You Maintenance Schedule

5 **Maintenance Procedures**
- Inspection
- Floatables and Sediment Cleanout

8 **Downstream Defender® Installation Log**

9 **Downstream Defender® Inspection and Maintenance Log**

COPYRIGHT STATEMENT: The contents of this manual, including the drawings and specifications contained herein or annexed hereto, are intended for the use of the recipient to whom the document and all associated information are directed. Hydro International plc owns the copyright of this document (including any drawings or graphics), which is supplied in confidence. It must not be used for any purpose other than that for which it is supplied and must not be reproduced, in whole or in part stored in a retrieval system or transmitted in any form or by any means without prior permission in writing from Hydro International plc. Downstream Defender® is a trademarked hydrodynamic vortex separation device of Hydro International plc. A patent covering the Downstream Defender® has been granted.

DISCLAIMER: Information and data contained in this manual is exclusively for the purpose of assisting in the operation and maintenance of Hydro International plc's Downstream Defender®. No warranty is given nor can liability be accepted for use of this information for any other purpose. Hydro International plc have a policy of continuous product development and reserve the right to amend specifications without notice.

Hydro International (Stormwater), 94 Hutchins Drive, Portland ME 04102
Tel: (207) 756-6200 Fax: (207) 756-6212 Web: www.hydro-int.com

Downstream Defender® by Hydro International

The Downstream Defender® is an advanced Hydrodynamic Vortex Separator designed to provide high removal efficiencies of settleable solids and their associated pollutants, oil, and floatables over a wide range of flow rates.

The Downstream Defender® has unique, flow-modifying internal components developed from extensive full-scale testing, CFD modeling and over thirty years of hydrodynamic separation experience in wastewater, combined sewer and stormwater applications. These internal components distinguish the Downstream Defender® from simple swirl-type devices and conventional oil/grit separators by minimizing turbulence and headlosses, enhancing separation, and preventing washout of previously stored pollutants.

The high removal efficiencies and inherent low headlosses of the Downstream Defender® allow for a small footprint making it a compact and economical solution for the treatment of non-point source pollution.

Benefits of the Downstream Defender®

- Removes sediment, floatables, oil and grease
- No pollutant washouts
- Small footprint
- No loss of treatment capacity between clean-outs
- Low headloss
- Efficient over a wide ranges of flows
- Easy to install
- Low maintenance

Applications

- New developments and retrofits
- Utility yards
- Streets and roadways
- Parking lots
- Pre-treatment for filters, infiltration and storage
- Industrial and commercial facilities
- Wetlands protection

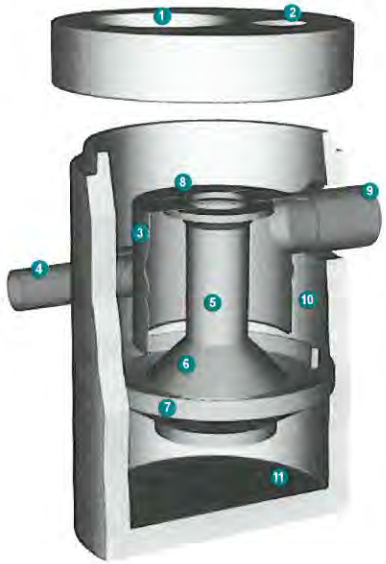

Downstream Defender® Components

1. Central Access Port
2. Floatables Access Port (6-ft., 8-ft. and 10-ft. models only)
3. Dip Plate
4. Tangential Inlet
5. Center Shaft
6. Center Cone
7. Benching Skirt
8. Floatables Lid
9. Outlet Pipe
10. Floatables Storage
11. Isolated Sediment Storage Zone

Hydro Maintenance Services

Hydro International has been engineering stormwater treatment systems for over 30 years. We understand the mechanics of removing pollutants from stormwater and how to keep systems running at an optimal level.

Nobody Knows our Systems Better than we do

Avoid Service Negligence

Sanitation services providers not intimately familiar with stormwater treatment systems are at risk of the following:

- Inadvertently breaking parts or failing to clean/replace system components appropriately.
- Charging you for more frequent maintenance because they lacked the tools to service your system properly in the first place.
- Billing you for replacement parts that might have been covered under your Hydro warranty plan
- Charging for maintenance that may not yet have been required.

Leave the Dirty Work to us

Trash, sediment and polluted water is stored inside treatment systems until they are removed by our team with a vactor truck. Sometimes teams must physically enter the system chambers in order to prepare the system for maintenance and install any replacement parts. Services include but are not limited to:

- Solids removal
- Removal of liquid pollutants
- Replacement media installation (when applicable)

Hydro International (Stormwater), 94 Hutchins Drive, Portland ME 04102
Tel: (207) 756-6200 Fax: (207) 756-6212 Web: www.hydro-int.com

Downstream Defender® Operation and Maintenance Manual

Better Tools, Better Results

Not all vactor trucks are created equal. Appropriate tools and suction power are needed to service stormwater systems appropriately. Companies who don't specialize in stormwater treatment won't have the tools to properly clean systems or install new parts.

Service Warranty

Make sure you're not paying for service that is covered under your warranty plan. Only Hydro International's service teams can identify tune-ups that should be on us, not you.

Treatment Systems Serviced by Hydro:

- Stormwwater filters
- Stormwater separators
- Baffle boxes
- Biofilters/biorention systems
- Storage structures
- Catch basins
- Stormwater ponds
- Permeable pavement

SAVE TIME & MONEY: CALL HYDRO FOR A QUOTE

1 (888) 382-7808

LEARN MORE AT HYDRO-INT.COM/SERVICE

Operation

Introduction

The Downstream Defender® operates on simple fluid hydraulics. It is self-activating, has no moving parts, no external power requirement and is fabricated with durable non-corrosive components. No manual procedures are required to operate the unit and maintenance is limited to monitoring accumulations of stored pollutants and periodic clean-outs. The Downstream Defender® has been designed to allow for easy and safe access for inspection/monitoring and clean-out procedures. Entry into the unit or removal of the internal components is not necessary for maintenance, thus safety concerns related to confined-space-entry are avoided.

Pollutant Capture and Retention

The internal components of the Downstream Defender® have been designed to protect the oil, floatables and sediment storage volumes so that separator performance is not reduced as pollutants accumulate between clean-outs. Additionally, the Downstream Defender® is designed and installed into the storm drain system so that the vessel remains wet between storm events. Oil and floatables are stored on the water surface in the outer annulus separate from the sediment storage volume in the sump of the unit providing the option for separate oil disposal, and accessories such as adsorbant pads. Since the oil/floatables and sediment storage volumes are isolated from the active separation region, the potential for re-suspension and washout of stored pollutants between clean-outs is minimized.

Wet Sump

The sump of the Downstream Defender® retains a standing water level between storm events. The water in the sump prevents stored sediment from solidifying in the base of the unit. The clean-out procedure becomes more difficult and labor intensive if the system allows fine sediment to dry-out and consolidate. Dried sediment must be manually removed by maintenance crews. This is a labor intensive operation in a hazardous environment.

Blockage Protection

The Downstream Defender® has large clear openings and no internal restrictions or weirs, minimizing the risk of blockage and hydraulic losses. In addition to increasing the system headloss, orifices and internal weirs can increase the risk of blockage within the unit.

Maintenance

Overview

The Downstream Defender® protects the environment by removing a wide range of pollutants from stormwater runoff. Periodic removal of these captured pollutants is essential to the continuous, long-term functioning of the Downstream Defender®. The Downstream Defender® will capture and retain sediment and oil until the sediment and oil storage volumes are full to capacity. When sediment and oil storage capacities are reached, the Downstream Defender® will no longer be able to store removed sediment and oil. Maximum pollutant storage capacities are provided in Table 1.

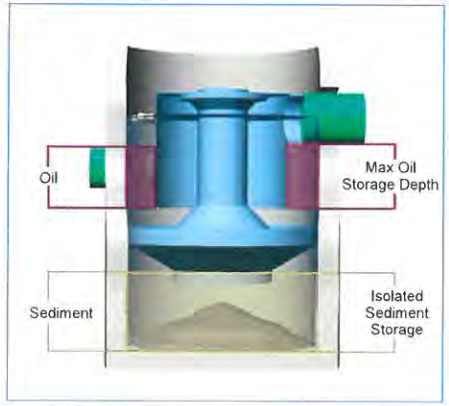

Fig.1 Pollutant storage volumes of the Downswtream Defender®.

Hydro International (Stormwater), 94 Hutchins Drive, Portland ME 04102
Tel: (207) 756-6200 Fax: (207) 756-6212 Web: www.hydro-int.com

The Downstream Defender® allows for easy and safe inspection, monitoring and clean-out procedures. A commercially or municipally owned sump-vac is used to remove captured sediment and floatables. Access ports are located in the top of the manhole. On the 6-ft, 8-ft and 10-ft units, the floatables access port is above the outlet pipe between the concrete manhole wall and the dip plate. The sediment removal access ports for all Downstream Defender® models are located directly over the hollow center shaft.

Maintenance events may include Inspection, Oil & Floatables Removal, and Sediment Removal. Maintenance events do not require entry into the Downstream Defender®, nor do they require the internal components of the Downstream Defender® to be removed. In the case of inspection and floatables removal, a vactor truck is not required. However, a vactor truck is required if the maintenance event is to include oil removal and/or sediment removal.

Determining Your Maintenance Schedule

The frequency of cleanout is determined in the field after installation. During the first year of operation, the unit should be inspected every six months to determine the rate of sediment and floatables accumulation. A simple probe such as a Sludge Judge® can be used to determine the level of accumulated solids stored in the sump. This information can be recorded in the maintenance log (see page 9) to establish a routine maintenance schedule.

The vactor procedure, including both sediment and oil/flotables removal, for a 6-ft Downstream Defender® typically takes less than 30 minutes and removes a combined water/oil volume of about 500 gallons.

Inspection Procedures

Inspection is a simple process that does not involve entry into the Downstream Defender®. Maintenance crews should be familiar with the Downstream Defender® and its components prior to inspection.

Scheduling

- It is important to inspect your Downstream Defender® every six months during the first year of operation to determine your site-specific rate of pollutant accumulation
- Typically, inspection may be conducted during any season of the year
- Sediment removal is not required unless sediment depths exceed 75% of maximum clean-out depths stated in Table 1

Recommended Equipment

- Safety Equipment and Personal Protective Equipment (traffic cones, work gloves, etc.)
- Crow bar or other tool to remove grate or lid
- Pole with skimmer or net
- Sediment probe (such as a Sludge Judge®)
- Trash bag for removed floatables
- Downstream Defender® Maintenance Log

Table 1. Downstream Defender® Pollutant Storage Capacities and Max. Cleanout Depths.

Unit Diameter	Total Oil Storage	Oil Clean-out Depth	Total Sediment Storage	Sediment Clean-out Depth	Max. Liquid Volume Removed
(feet)	(gallons)	(inches)	(gallons)	(inches)	(gallons)
4	70	<16	141	<18	384
6	216	<23	424	<24	1,239
8	540	<33	939	<30	2,884
10	1,050	<42	1,757	<36	5,546
12	1,770	<49	2,970	<42	9,460

NOTES

1. Refer to Dowmstream Defender® Clean-out Detail (Fig. 1) for measurement of depths.

2. Oil accumulation is typically less than sediment, however, removal of oil and sediment during the same service is recommended.

3. Remove floatables first, then remove sediment storage volume.

4. Sediment removal is not required unless sediment depths exceed 75% of maximum clean-out depths stated in Table 1.

Fig.4

Fig.5

Fig.6

Inspection Procedures

1. Set up any necessary safety equipment around the access port or grate of the Downstream Defender® as stipulated by local ordinances. Safety equipment should notify passing pedestrian and road traffic that work is being done.

2. Remove the lids to the manhole (Fig. 4). NOTE: The 4-ft Downstream Defender® will only have one lid.

3. Without entering the vessel, look down into the chamber to inspect the inside. Make note of any irregularities. See Fig.7 and 8 for typical inspection views.

4. Without entering the vessel, use the pole with the skimmer net to remove floatables and loose debris from the outer annulus of the chamber.

5. Using a sediment probe such as a Sludge Judge®, measure the depth of sediment that has collected in the sump of the vessel (Fig.5).

6. On the Maintenance Log (see page 9), record the date, unit location, estimated volume of floatables and gross debris removed, and the depth of sediment measured. Also note any apparent irregularities such as damaged components or blockages.

7. Securely replace the grate or lid.

8. Take down safety equipment.

9. Notify Hydro International of any irregularities noted during inspection.

Floatables and Sediment Cleanout

Floatables cleanout is typically done in conjunction with sediment removal. A commercially or municipally owned sump-vac is used to remove captured sediment and floatables (Fig.6).

Floatables and loose debris can also be netted with a skimmer and pole. The access port located at the top of the manhole provides unobstructed access for a vactor hose and skimmer pole to be lowered to the base of the sump.

Scheduling

- Floatables and sump cleanout are typically conducted once a year during any season.
- If sediment depths are greater than 75% of maximum clean-out depths stated in Table 1, sediment removal is required.
- Floatables and sump cleanout should occur as soon as possible following a spill in the contributing drainage area.

Fig.7 View over center shaft into sediment storage zone.

Fig.8 View of outer annulus of floatables and oil collection zone.

Hydro International (Stormwater), 94 Hutchins Drive, Portland ME 04102
Tel: (207) 756-6200 Fax: (207) 756-6212 Web: www.hydro-int.com

Recommended Equipment

- Safety Equipment (traffic cones, etc)
- Crow bar or other tool to remove grate or lid
- Pole with skimmer or net (if only floatables are being removed)
- Sediment probe (such as a Sludge Judge®)
- Vactor truck (6-inch flexible hose recommended)
- Downstream Defender® Maintenance Log

1. Set up any necessary safety equipment around the access port or grate of the Downstream Defender® as stipulated by local ordinances. Safety equipment should notify passing pedestrian and road traffic that work is being done.

2. Remove the lids to the manhole (NOTE: The 4-ft Downstream Defender® will only have one lid).

3. Without entering the vessel, look down into the chamber to inspect the inside. Make note of any irregularities.

4. Using the Floatables Port for access, remove oil and floatables stored on the surface of the water with the vactor hose or the skimmer net (Fig.9).

5. Using a sediment probe such as a Sludge Judge®, measure the depth of sediment that has collected in the sump of the vessel and record it in the Maintenance Log (Pg.9).

6. Once all floatables have been removed, drop the vactor hose to the base of the sump via the Central Access Port. Vactor out the sediment and gross debris off the sump floor (Fig.6).

7. Retract the vactor hose from the vessel.

8. On the Maintenance Log provided by Hydro International, record the date, unit location, estimated volume of floatables and gross debris removed, and the depth of sediment measured. Also note any apparent irregularities such as damaged components or blockages.

9. Securely replace the grate or lid.

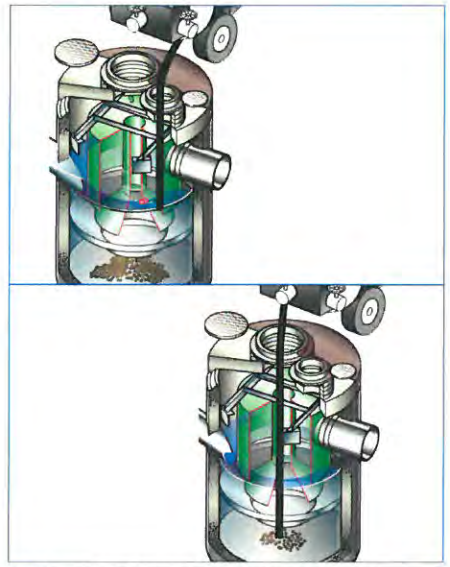

Fig.9 Floatables and sediment are removed with a vactor hose

Maintenance at a Glance

Activity	Frequency
Inspection	- Regularly during first year of installation - Every 6 months after the first year of installation
Oil and Floatables Removal	- Once per year, with sediment removal - Following a spill in the drainage area
Sediment Removal	- Once per year or as needed - Following a spill in the drainage area
NOTE: For most cleanouts it is not necessary to remove the entire volume of liquid in the vessel. Only removing the first few inches of oils/floatables and the sediment storage volume is required.	

Foundary Place

Stormceptor® STC
Inspection and Maintenance Information

Stormceptor® Inspection and Maintenance

Regular inspection and maintenance is a proven, cost-effective way to maximize water resource protection for all stormwater pollution control practices, and are required to insure proper functioning of the Stormceptor System. Both inspection and maintenance of the Stormceptor system is easily performed from the surface. Stormceptor's patented technology has no moving parts, simplifying the inspection and maintenance process.

Please refer to the following information and guidelines before conducting inspection and maintenance activities.

When is inspection needed?

- Post-construction inspection is required prior to putting the Stormceptor System into service.
- Routine inspections are recommended during the first year of operation to accurately assess the sediment accumulation.
- Specifically for New Jersey installations, regulations require all BMPs to be inspected a minimum four times per year and after every storm with greater than one inch of rainfall.
- Inspection frequency in subsequent years is based on the maintenance plan developed in the first year.
- Inspections should also be performed immediately after an oil, fuel or other chemical spill.

When is maintenance cleaning needed?

- For optimum performance, the unit should be cleaned out once the sediment depth reaches 15% of the unit's total storage capacity (see Table 1). Generally, the minimum cleaning frequency is once annually, although the frequency can be based on historical inspection results.
- The unit should be cleaned out immediately after an oil, fuel or chemical spill.

Table 1

Sediment Maintenance Depth* and Oil Capacity		
STC Model	**Sediment Depth*** (inches)	**Oil Capacity** (gallons)
450i	8	86
900	8	251
1200	10	251
1800	15	251
2400	12	840

3600	17	840
4800	15	909
6000	18	909
7200	15	1059
11000	17	2797
13000	20	2797
16000	17	3055
* based on 15% of the lower chamber volume		

What conditions can compromise the Stormceptor System performance?

- If the system is not maintained regularly and fills with sediment and debris beyond the capacity indicated in Table 1, sediment removal efficiency may be reduced.
- If an oil spill(s) exceeds the oil capacity of the system, subsequent spills may not be captured.
- If debris clogs the inlet of the system, removal efficiency of sediment and hydrocarbons may be reduced.
- If a downstream blockage occurs, a backwater condition may occur in the system and removal efficiency of sediment and hydrocarbons may be reduced.

What training is required?

The Stormceptor System is inspected and maintained by professional vacuum cleaning service providers with experience in the maintenance of underground tanks, sewers and catch basins. For typical inspection and maintenance activities, no specific supplemental training is required for the Stormceptor System. Information provided in this document or the Stormceptor Operation and Maintenance Manual (provided to the system owner) contains sufficient guidance to maintain the system properly.

In unusual circumstances, such as if a damaged component needs replacement or some other condition requires manned entry into the vessel, confined space entry procedures must be followed. Only professional maintenance service providers trained in these procedures should enter the vessel. Service provider companies typically have personnel who are trained and certified in confined space entry procedures according to local, state, and federal standards.

What equipment is typically required for inspection?

- Manhole access cover lifting tool
- Oil dipstick
- Sediment probe
- Flashlight
- Camera
- Data log
- Safety cones and caution tape
- Hard hat, safety shoes, safety glasses, and chemical-resistant gloves

How is the Stormceptor System inspected?

- The Stormceptor System can be inspected through a standard surface manhole

access cover.

- Sediment and oil depth inspections are performed with a sediment probe and oil dipstick. Oil depth is measured through the oil inspection port. Sediment depth can be measured through the oil inspection port or exit riser pipe.
- Inspections also involve a visual inspection of the internal components of the system.

What equipment is typically required for maintenance?

- Vacuum truck equipped with water hose and jet nozzle
- Small pump and tubing for oil removal
- Manhole access cover lifting tool
- Oil dipstick
- Sediment probe
- Flashlight
- Camera
- Data log
- Safety cones and caution tape
- Hard hats, safety shoes, safety glasses, chemical-resistant gloves, and hearing protection for service providers
- Gas analyzer, respiratory gear, and safety harness for specially trained personnel if confined space entry is required

How is the Stormceptor System maintained?

- The Stormceptor System can be maintained through a standard surface manhole access cover.
- Insert the oil dipstick into the oil inspection port. If oil is present, pump off the oil layer into separate containment using a small pump and tubing.
- Maintenance cleaning of accumulated sediment is performed with a vacuum truck.
- For 6-ft diameter models and larger, the vacuum hose is inserted into the lower chamber via the 24-inch outlet riser pipe.
- For 4-ft diameter model, the removable drop tee is lifted out, and the vacuum hose is inserted into the lower chamber via the 12-inch drop tee hole.
- Using the vacuum hose, decant the water from the lower chamber to the sanitary sewer, if permitted by the local regulating authority, or into a separate containment tank.
- Remove the sludge from the bottom of the unit using the vacuum hose.
- Re-fill the lower chamber with water where required by the local jurisdiction.
- Units that have not been maintained regularly, have surpassed the maximum recommended sediment capacity, or contain damaged components may require manned entry by trained personnel using proper confined space entry procedures.

What is required for proper disposal?

- Disposal requirements for recovered pollutants may vary depending on local guidelines. In most areas the sediment, once dewatered, can be disposed of in a sanitary landfill. It is not anticipated that the sediment would be classified as hazardous waste.

What about oil spills?

- Petroleum-based pollutants captured by the Stormceptor system (oil/chemical/fuel spills) should be removed and disposed of by a licensed waste management company.
- Although Stormceptor captures virtually all free oil, a sheen at the outlet **does not** mean the unit isn't working. A rainbow or sheen can be visible at oil concentrations of less than 10 mg/L (ppm).

What factors affect the costs involved with inspection/maintenance?

- Inspection and maintenance costs are based on unit size, sediment/oil/hazardous material loads, transportation distances, tipping fees, disposal requirements and other local regulations.

System schematic and component functions

Below is a schematic of the Stormceptor System with key components identified and their functions briefly described.

- **Manhole access cover** – provides access to the subsurface components
- **Precast reinforced concrete structure** – provides the vessel's watertight structural support
- **Fiberglass insert** – separates vessel into upper and lower chambers
- **Weir** – directs incoming stormwater and oil spills into the lower treatment chamber
- **Orifice plate** – controls water flow rate into the lower treatment chamber and prevents scour of accumulated pollutants
- **Inlet drop tee** – conveys stormwater into the lower treatment chamber and splits flow into two opposite tangential streams
- **Fiberglass skirt** – provides double-wall containment of hydrocarbons
- **Outlet riser pipe** – conveys treated water to the upper chamber; primary vactor access port for sediment removal

- **Oil inspection port** – primary access for measuring oil depth and oil removal
- **Safety grate** – safety measure to cover riser pipe in the event of manned entry into vessel

The Stormceptor System has no moving parts to wear out and therefore maintenance activities are generally focused on pollutant removal.

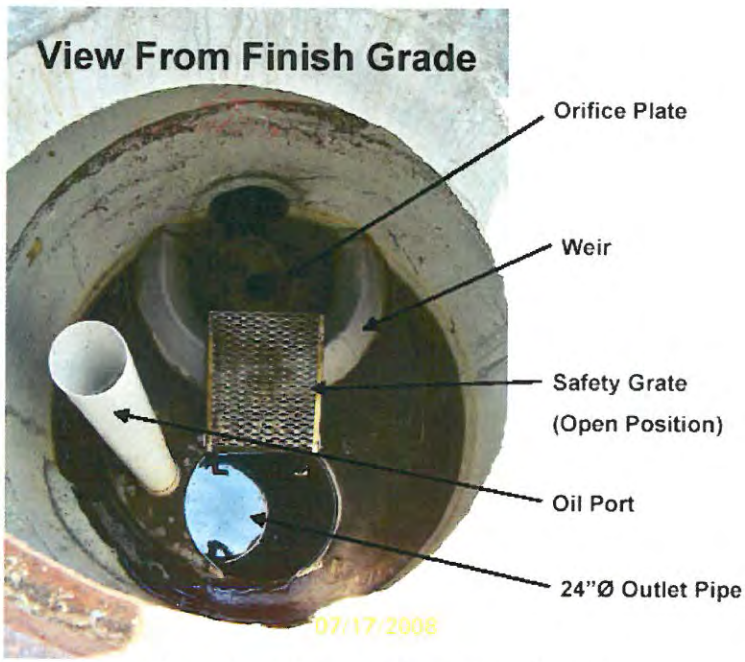

The depth of sediment can be measured from the surface by using a sediment probe or dipstick tube equipped with a ball check valve and inserted through the 24-inch outlet riser pipe. Oil level can similarly be checked through the oil inspection port.

DPW SAMPLE

Inspection Date & Time	**General Weather Forecast:**	**Temperature : ____° Hi / ____° Lo**

Barometer: _____ Humidity: _____ Wind: _____

Have both Vortechnics have been checked and cleaned? YES NO

If yes, when?_____

If no, which one(s) and provide explanation:_____

_____

Condition of Control Measures (i.e. need for maintenance and/or repair):

_____

_____

Circle appropriate answer. Corrective action must be taken for any answers in the affirmative.

Litter present on ground that could contaminate stormwater or be washed away in stormwater?	YES	NO
Sand/Salt pile has track out?	YES	NO
Fueling area has leaks, drips, spills and/or stains?	YES	NO
Spill kit at fueling area is missing or short adequate supplies?	YES	NO
Outdoor vehicle storage area has leaks, drips and/or stains?	YES	NO
Drums, chemicals and wastes are stored outside and exposed to stormwater runoff?	YES	NO
Catch basin grates are obstructed and stormwater cannot enter freely?	YES	NO
Sheen and/or other waste is accumulated around the Waste Oil AST?	YES	NO
There is evidence of stormwater pollution in the retention pond?	YES	NO

When was the Facility (DPW and Recycling Center) and access road last swept with the street sweeper?	When was the oil/water separator in the floor drain system last checked and cleaned?

Is the oil/water separator functioning properly? YES NO

Any previously unidentified discharges of pollutants from the site:

Any incident of non-compliance? i.e. failed control measures need replacement
(circle one) YES / NO If yes, provide description comment below:

_____

_____

_____

Any control measures needed to comply with permit requirements? (circle one) YES / NO
If yes, provide description comment below:

_____

_____

_____

Both Inspectors must print and sign this inspection form:

Sample Collection Date & Time	Date & Time Storm or Snowmelt Began:	Sample Location (Outfall #)

Nature of the discharge: (i.e. runoff or snow melt):

Did previous storm ended > 72* hours before start of this storm? Yes No
If "No", explain:

Results of observations (circle all that apply and provide additional comment as necessary reverse side of this form)

Color: Brown Redish Brown Gray Green Multi-color No color Other
Odor: Rotten egg Soapy Chlorine/Bleach odor Sharp/Pungent odor No odor Other
Clarity: Impenetrable by Light Cloudy Clear/Transparent
Floating Solids present? (circle one) No Yes Describe:
Settled Solids present? (circle one) No Yes Describe:
Suspended solids present? (circle one) No Yes Describe:
Foam present? (circle one) No Yes Describe:
Oil sheen present? (circle one) No Yes Describe:

Other observations:

Probable sources of any observed stormwater contamination:

If applicable, why was it not possible to take samples within the first 30 minutes. (Write "N/A" if samples were collected within first 30 minutes.)

Recommended action to prevent in future:

Inspector(s) (Print & Sign)

_____ _____

* The 72 hour interval can be waived when the previous storm did not yield a measurable Discharge or if you are able to document that less than 72 hours interval is representative of local storm events during sampling period.

Sagamore Bridge / State St Sample

INSPECTION CHECKLIST AND MAINTENANCE GUIDANCE
UNDERGROUND SAND FILTER INSPECTION CHECKLIST

Location:_____
Date:_____ Time:_____ Site Conditions:_____

Inspection Items	Satisfactory (S) or Unsatisfactory (U)	Comments/Corrective Action
Underground Sand Filter Inspection List		
Complete drainage of the filter in 48 hours after a rain event?		
Clogging of the filter surface?		
Clogging of the inlet/outlet structures?		
Clogging of filter fabric?		
Filter clear of debris and functional?		
Leaks or seeps in filter?		
Obstructions of spillway?		
Animal burrows in filter?		
Sediment accumulation in filter bed (greater than 50%)?		
Cracking, spalling, bulging or deterioration of concrete?		
Erosion in area draining to sand filter?		
Erosion around inlets, filter bed, or outlets?		
Pipes and other structures in good condition?		
Undesirable vegetation growth?		
Other (Describe)?		
Hazards		
Have there been complaints from residents?		
Public hazards noted?		

If any of the above inspection items are **UNSATISFACTORY**, list corrective actions and the corresponding completion dates below:

Corrective Action Needed	Due Date	Date Completed

Inspector Signature:_____ Inspector Name (Printed)_____

Downstream Defender® Installation Log

HYDRO INTERNATIONAL REFERENCE NUMBER:	
SITE NAME:	
SITE LOCATION:	
OWNER:	CONTRACTOR:
CONTACT NAME:	CONTACT NAME:
COMPANY NAME:	COMPANY NAME:
ADDRESS:	ADDRESS:
TELEPHONE:	TELEPHONE:
FAX:	FAX:

INSTALLATION DATE: / /

MODEL (CIRCLE ONE): **4-FT** **6-FT** **8-FT** **10-FT** **CUSTOM**

Hydro International (Stormwater), 94 Hutchins Drive, Portland ME 04102
Tel: (207) 756-6200 Fax: (207) 756-6212 Web: www.hydro-int.com

Downstream Defender® Inspection and Maintenance Log

Date	Initials	Depth of Floatables and Oils	Sediment * Depth Measured	Volume of Sediment Removed	Site Activity and Comments

*Note: Sediment removal is not required unless sediment depths exceed 75% of maximum clean-out depths stated in Table 1.

Hydro International (Stormwater), 94 Hutchins Drive, Portland ME 04102
Tel: (207) 756-6200 Fax: (207) 756-6212 Web: www.hydro-int.com

Appendix H

Salt Reduction Plan

Appendix I

Employee Training Records

Illicit Discharge Detection and Elimination (IDDE)
Employee Training Record

Portsmouth, New Hampshire

Date	Type of Training	Participant Organizations

Name	Title	Signature